TOUCH COMPUTER

TC701

Product Reference Guide

MN-005564-01EN Rev. A

Zebra Technologies | 3 Overlook Point | Lincolnshire, IL 60069 USA
zebra.com

2026/02/27

The Zebra wordmark and logo are trademarks of Zebra Technologies Corp., registered in many jurisdictions worldwide. All other trademarks are the property of their respective owners. ©2026 Zebra Technologies Corp. and/or its affiliates.

Information in this document is subject to change without notice. The software described in this document is furnished under a license agreement or nondisclosure agreement. The software may be used or copied only in accordance with the terms of those agreements.

For further information regarding legal and proprietary statements, please go to:

SOFTWARE: zebra.com/informationpolicy.
COPYRIGHTS: zebra.com/copyright.
PATENTS: ip.zebra.com.
WARRANTY: zebra.com/warranty.
END USER LICENSE AGREEMENT: zebra.com/eula.

Terms of Use

Proprietary Statement

This manual contains proprietary information of Zebra Technologies Corporation and its subsidiaries (“Zebra Technologies”). It is intended solely for the information and use of parties operating and maintaining the equipment described herein. Such proprietary information may not be used, reproduced, or disclosed to any other parties for any other purpose without the express, written permission of Zebra Technologies.

Product Improvements

Continuous improvement of products is a policy of Zebra Technologies. All specifications and designs are subject to change without notice.

Liability Disclaimer

Zebra Technologies takes steps to ensure that its published Engineering specifications and manuals are correct; however, errors do occur. Zebra Technologies reserves the right to correct any such errors and disclaims liability resulting therefrom.

Limitation of Liability

In no event shall Zebra Technologies or anyone else involved in the creation, production, or delivery of the accompanying product (including hardware and software) be liable for any damages whatsoever (including, without limitation, consequential damages including loss of business profits, business interruption, or loss of business information) arising out of the use of, the results of use of, or inability to use such product, even if Zebra Technologies has been advised of the possibility of such damages. Some jurisdictions do not allow the exclusion or limitation of incidental or consequential damages, so the above limitation or exclusion may not apply to you.

Contents

About This Guide **13**
Configurations 13
Notational Conventions 13
Icon Conventions 14
Service Information 14
Determining Software Versions 15
Determining the Serial Number 15

Getting Started **17**
Unpacking the TC701 17
Features 18
Setting Up the Device 20
Installing the MicroSD Card 21
Installing a SIM Card (WWAN Only) 23
Activating an eSIM 26
Deactivating an eSIM 27
Reactivating an eSIM 27
Erasing an eSIM Profile 27
Installing a Battery 27
Using the Rechargeable Li-Ion Battery with BLE Beacon 28
Charging the Device 28
Replacing the MicroSD Card 28
Replacing the SIM Card 31
Replacing the Battery 34

Using the Device **37**
Home Screen 37
Setting the Home Screen Rotation 38
Status Bar 38
Managing Notifications 42
Opening the Quick Access Panel 43
Editing the Quick Access Tiles 44
Battery Management 45
Checking Battery Status 45
Charging Indications 46
Monitoring Battery Usage 46
Low Battery Notification 47
Battery Hot Swap 47
Turning Off the Radios 50
Interactive Sensor Technology 50
Waking the Device 50
USB Communication 51
Transferring Files 51
Transferring Photos 51
Disconnecting from the Host Computer 51

Settings **52**
Accessing Settings 52
Display Settings 52
Setting the Screen Brightness Automatically 52
Setting the Screen Brightness Manually 52
Setting Night Light 52
Setting Screen Rotation 53
Setting Screen Timeout 53
Setting Lock Screen Notifications 53
Setting Font and Display Size 54
Setting Notification LED Brightness Level 54
Setting Touch Panel Mode 54
Setting the Date and Time 54

General Sound Setting....55
Sound Options....55
Zebra Volume Controls....56
Accessibility Settings....56
Screen Reader Options....56
Display Accessibility Options....57
Interaction Controls....60
Captions and Audio Settings....62
General Accessibility Options....63
Setting Wake-Up Sources....65
Remapping a Button....65
Remappable Buttons....66
Alert Button....66
Configure the Alert Button....66
Alert Accessibility Service....67
Using an Alert Button....67
Keyboards....67
Keyboard Configuration....67
Enabling Keyboards....67
Switching Between Keyboards....68
Using the Keyboards....68
Enterprise Keyboard....68
Language Usage....69
Changing the Language Setting....69
Adding Words to the Dictionary....69
Notifications....70
Setting App Notifications....70
Viewing Notifications....70
Controlling Lock Screen Notifications....70
Enabling Blink Light....71

Applications....72
Installed Applications....72
Accessing Apps....73

Switching Between Recent Apps....73
Battery Manager....74
Opening Battery Manager....74
Battery Manager Information....74
Battery Manager Swap Tab....76
Camera....76
Taking Photos....76
Recording Videos....78
Quick Camera Photo Mode and Video Mode Settings....81
Camera Settings....81
DWDemo....82
DWDemo Icons....83
Selecting a Scanner....83
RxLogger....83
RxLogger Configuration....84
Configuration File....84
Enabling Logging....84
Disabling Logging....84
Extracting Log Files....84
Backing Up Data....85
RxLogger Utility....85
Zebra Showcase App....86
Installing the Zebra Showcase App....86
Available Demos....87

Data Capture....95
Imaging....95
Digital Camera....96
Operational Modes....96
Scanning Considerations....97
Scanning with Internal Imager....97
Scanning with Internal Camera....98
Scanning with the RS507/RS507X Hands-Free Imager....99
Scanning with the RS5100 Ring Scanner....101

Scanning with the RS6000 Bluetooth Ring Scanner....103
Scanning with the RS6100 Bluetooth Ring Scanner....105
Scanning with the DS2278 Digital Scanner....106
Scanning with the DS3678 Bluetooth Scanner....107
Scanning with the DS8178 Digital Scanner....109
Scanning with the LI3678 Linear Imager....110
DataWedge....111
Enabling DataWedge....111
Disabling DataWedge....112
Pairing a Bluetooth Ring Scanner....112
Pairing in SSI Mode Using Near Field Communication....112
Pairing in HID Mode Using Near Field Communication....112
Pairing Using Simple Serial Interface (SSI)....113
Pairing the Ring Scanner Using Bluetooth Human Interface Device....114
Pairing a Bluetooth Scanner....114
Pairing Using Simple Serial Interface....115
Pairing in SSI Mode Using Near Field Communication....115
Supported Decoders....116
Camera Supported Decoders....116
SR500 Internal Imager Supported Decoders....117
SR560 Internal Imager Supported Decoders....117
AC670 Internal Imager Supported Decoders....118
RS507/RS507x Supported Decoders....119
RS5100 Supported Decoders....120
RS6000 Supported Decoders....121
RS6100 Supported Decoders....121
DS2278 Supported Decoders....122
DS3678 Supported Decoders....123
DS8178 Supported Decoders....124
LI3678 Supported Decoders....125

Wireless....126
Wireless Wide Area Networks....126
Sharing the Mobile Data Connection....126

Data Usage....128
Cellular Network Settings....129
Wireless Local Area Network....132
Connecting to a Wi-Fi Network....132
Removing a Wi-Fi Network....133
WLAN Configuration....133
Bluetooth....138
Adaptive Frequency Hopping....139
Security....139
Bluetooth Profiles....140
Bluetooth Power States....141
Bluetooth Radio Power....141
Enabling Bluetooth....141
Disabling Bluetooth....141
Discovering Bluetooth Device(s)....141
Changing the Bluetooth Name....142
Connecting to a Bluetooth Device....142
Selecting Profiles on the Bluetooth Device....142
Unpairing a Bluetooth Device....142
Cast....143
Near Field Communication....143
Reading NFC Cards....143
Enterprise NFC Settings....144

Calls....145
Emergency Calling....145
Audio Modes....145
Bluetooth Headset....145
Adjusting Audio Volume....146
Making a Call Using the Dialer....146
Accessing Dialing Options....146
Make a Call Using Contacts....147
Using the Dialer....147
Using the Contacts App....147

Make a Call Using Call History....147
Using the Call History List....148
Making a Conference Call on GSM....148
Making a Call Using a Bluetooth Headset....149
Answering Calls....149
Call Settings....150

Accessories....152
Main Battery Charging....156
Charging the Spare Battery....157
Charging Temperature....157
Inserting a TC701 Shim into a Cradle....157
1-Slot Fast-Charging Cradle....158
Setting Up the 1-Slot Fast-Charging Cradle....160
1-Slot Ethernet Charging Cradle....160
Setting Up the 1-Slot Ethernet Charging Cradle....162
Ethernet Communication....162
1-Slot 2-Device Charging Cradle....164
Setting Up the 1-Slot 2-Device Charging Cradle....165
1-Slot Device and Spare Battery Charging Cradle....165
Setting Up the 1-Slot Device and Spare Battery Charging Cradle....167
1-Slot Device and Spare Battery Ethernet Charging Cradle....167
Setting Up the 1-Slot Device and Spare Battery Ethernet Charging Cradle....169
4-Slot Battery Charger....169
5-Slot Fast-Charging Cradle....170
Setting Up the 5-Slot Fast-Charging Cradle....172
5-Slot Ethernet Charging Cradle....172
Setting Up the 5-Slot Ethernet Charging Cradle....174
5-Slot Charging Cradle for Devices and Spare Batteries....174
Setting Up the 5-Slot Device and Spare Battery Charging Cradle....176
5-Slot 10-Devices Charging Cradle....176
Setting Up the 5-Slot 10-Devices Charging Cradle....178
Charge/USB-C Cable....178
Connecting to a Host Computer....178

Charging the Device....179
Hand Strap....179
Attaching the Hand Strap....179
Removing the Hand Strap....180
Stylus and Tether....181
Stylus and Tether Installation....181
Stylus and Tether with Hand Strap Installation....183
Trigger Handle....184
Installing the Optional Lanyard....185
Inserting the Device into the Trigger Handle....185
Removing the Device from the Trigger Handle....186
5-Slot Cradle Bracket Installation....186
Installing the 5-Slot Cradle on a Rack....189
Rack Mount Installation....192
Wall Installation....195
Bottom Tray Assembly....196
Mounting the Bracket....196

Application Deployment....198
Security....198
Secure Certificates....198
Installing a Secure Certificate....199
Configuring Credential Storage Settings....199
Android Development Tools....199
Android Development Workstation....199
Enabling Developer Options....200
EMDK for Android....200
StageNow for Android....200
GMS Restricted....201
ADB USB Setup....201
Application Installation Methods....202
Installing Applications Using the USB Connection....202
Installing Applications Using the Android Debug Bridge....203
Installing Applications Using Wireless ADB....203

Installing Applications Using a microSD Card....204
Uninstalling an Application....205
Android System Update....206
Performing a System Update Using a USB Drive....206
Performing a System Update Using microSD Card....206
Performing a System Update Using ADB....207
Verifying System Update Installation....207
Android-Enterprise Reset....208
Performing an Enterprise Reset From Device Settings....208
Performing an Enterprise Reset Using microSD Card....208
Performing an Enterprise Reset Using ADB....209
Android Factory Reset....209
Performing a Factory Reset Using microSD Card....209
Performing a Factory Reset Using ADB....210
Android Storage....210
Random Access Memory....211
Viewing Memory....211
Internal Storage....211
External Storage....212
Managing Apps....213
App Details....213
Managing Downloads....214

Maintenance and Troubleshooting....215
Maintaining the Device....215
Display Best Practices....215
Best Practices for Enterprise Mobile Devices Operating in Hot Environments and Direct Sunlight....216
Battery Safety Guidelines....216
Cleaning Instructions....217
Cleaning and Disinfecting Guidelines....217
Approved Cleaning and Disinfectant Agents....217
Special Cleaning Notes....218
Cleaning Frequency....218

Cleaning the Device 219
Housing 219
Display 219
Camera and Exit Window 219
Battery Guide Slots 219
Cleaning the Battery Connector 219
Cleaning Cradle Connectors 220
Troubleshooting 220
Resetting the Device 220
Device Troubleshooting 221
1-Slot Cradle Troubleshooting 223
1-Slot Ethernet Cradle Troubleshooting 224
4-Slot Battery Charger Troubleshooting 225
5-Slot Cradle Troubleshooting 226
5-Slot Ethernet Cradle Troubleshooting 227

Technical Specifications 228
AC670 Decode Ranges 228
SR500 Decode Ranges 229
SR560 Decode Ranges 229
1-Slot Cradle Technical Specifications 230
1-Slot Ethernet Cradle Technical Specifications 231
5-Slot Cradle Technical Specifications 231
5-Slot Ethernet Cradle Technical Specifications 232
Trigger Handle Technical Specifications 233
Charge/USB Cable Technical Specifications 233

About This Guide

This guide provides information about setting up and using the TC701 touch computer. Some screens shown in this guide may differ from the actual screens shown on the device.

This guide includes Android operating system (OS) 15 and above. Android 15 is the baseline, and updated OS releases are indicated in the content where applicable.

Configurations

This section describes the configurations covered in this guide.

Table 1 Configurations

Configuration	Radio	Display	Memory	Data Capture
TC7010-021B1A0001-A6	LAN, Wi-Fi 7, RFID	6690 2.0GHz	8GB RAM/128GB ROM	SR560 Imager, 50MP RFC, 8MP FFC
TC7010-021E1A0001-A6	LAN, Wi-Fi 7, RFID	6690 2.0GHz	8GB RAM/128GB ROM	AC670 Imager, 50MP RFC, 8MP FFC
TC7010-041B2B0001-A6	LAN, Wi-Fi 7, RFID	6690 2.9GHz	12GB RAM/256GB ROM	SR560 Imager, Ultrawide Camera, 50MP RFC, 8MP FFC
TC7010-041B2C00A1-A6	LAN, Wi-Fi 7, RFID	6690 2.9GHz	12GB RAM/256GB ROM	SR560 Imager, Time of Flight Sensor, 50MP RFC, 8MP FFC

Notational Conventions

The following notational conventions make the content of this document easy to navigate.

- **Bold** text is used to highlight the following:
  - Dialog box, window, and screen names
  - Dropdown list and list box names
  - Checkbox and radio button names
  - Icons on a screen

  - Key names on a keypad
  - Button names on a screen
- Bullets (•) indicate:
  - Action items
  - List of alternatives
  - Lists of required steps that are not necessarily sequential
- Sequential lists (for example, those that describe step-by-step procedures) appear as numbered lists.

Icon Conventions

The documentation set is designed to give the reader more visual clues. The following visual indicators are used throughout the documentation set.

NOTE: The text here indicates information that is supplemental for you to know and that is not required to complete a task.

IMPORTANT: The text here indicates information that is important for you to know.

CAUTION: If the precaution is not heeded, you could receive a minor or moderate injury.

WARNING: If danger is not avoided, you CAN be seriously injured or killed.

DANGER: If danger is not avoided, you WILL be seriously injured or killed.

Service Information

If you have a problem with your equipment, contact Zebra Global Customer Support for your region. Contact information is available at: zebra.com/support.

When contacting support, please have the following information available:

- Serial number of the unit
- Model number or product name
- Software/firmware type and version number

Zebra responds to calls by email, telephone, or fax within the time limits set forth in support agreements.

If your problem cannot be solved by Zebra Customer Support, you may need to return your equipment for servicing and will be given specific directions. Zebra is not responsible for any damages incurred during shipment if the approved shipping container is not used. Shipping the units improperly can possibly void the warranty.

If you purchased your Zebra business product from a Zebra business partner, contact that business partner for support.

Determining Software Versions

Before contacting Customer Support, determine the current software version on your device.

1. Swipe down from the Status bar to open the Quick Access panel, and then touch ⚙.
2. Touch **About phone**.
3. Scroll to view the following information:

   Basic info

   - Device name
   - Phone number (WWAN only)
   - Battery Information
   - Phone information (WWAN only)

   Legal & regulatory

   - Legal information
   - SW components

   Device details

   - SIM status (WWAN only)
   - Model
   - EID (WWAN only)
   - Android version

   Device identifiers

   - IP address
   - Wi-Fi MAC address
   - Device Wi-Fi MAC address
   - Bluetooth address
   - Uptime
   - Build Fingerprint
   - Build number

   To determine the device's International Mobile Equipment Identity (IMEI) information (WWAN only), touch **About phone** > **IMEI**.

   - **IMEI** - Displays the IMEI number for the device.
   - **IMEI SV** - Displays the IMEI software version (SV) number for the device.

Determining the Serial Number

Before contacting Customer Support, determine the serial number of your device.

- Swipe down from the Status bar with two fingers to open the Quick Access panel, and then touch ⚙.
- Touch **About phone**.

- Touch **Status**.
- Touch **Model & hardware**.
- Touch **Serial number**.

Getting Started

This section provides information for getting the device up and running for the first time.

Unpacking the TC701

This section describes how to unpack the TC701 and what to expect after unpackaging.

1. Carefully remove all protective material from the device and save the shipping container for later storage and shipping.
2. Verify that the following were received:
   - TC701 Touch Computer
   - Rechargeable Lithium-ion Battery
   - Regulatory Guide
3. Inspect the equipment for damage. If any equipment is missing or damaged, contact the Global Customer Support Center immediately.
4. Before using the device for the first time, remove the protective shipping film that covers the display and camera window.

Features

This section lists the features of the TC701 touch computer.

Figure 1 Front and Side Views

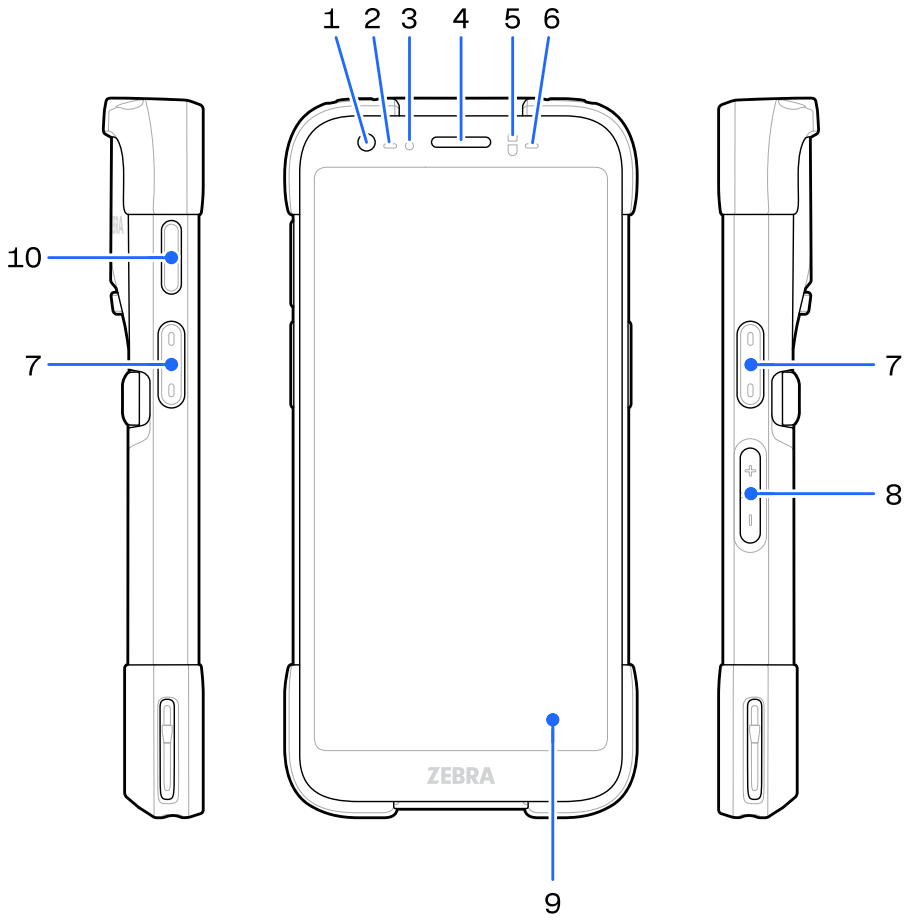

Table 2 Front and Side Views

Number	Item	Description
1	8MP Front Camera	Takes photos and videos.
2	Scan LED	Indicates data capture status.
3	Charging LED	Indicates battery charging status while charging and application generated notifications.
4	Speaker	Used for audio playback in handset mode and acts as one of the stereo speakers in speakerphone mode.
5	Proximity/Light Sensor	Determines proximity and ambient light for controlling display backlight intensity.
6	Scan LED	Indicates data capture status.
7	Scanner Button	Initiates barcode scanning (programmable).

Table 2 Front and Side Views (Continued)

Number	Item	Description
8	Volume Up/Down Button	Increase and decrease audio volume (programmable).
9	6 in. LCD Touchscreen	Displays all information needed to operate the device.
10	Push-to-Talk (PTT) Button	Initiates a Push-to-Talk (PTT) call (programmable).

Figure 2 Back and Top Views

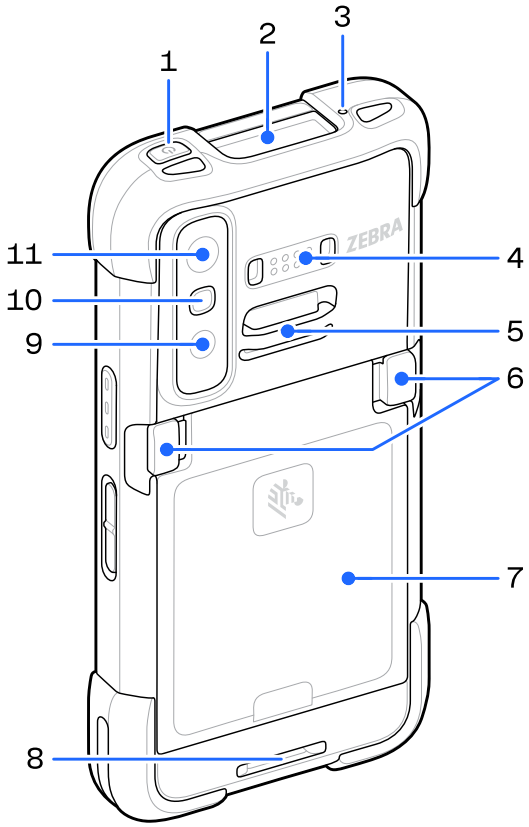

Table 3 Back and Top Views

Number	Item	Description
1	Power button	Turns the display on and off. Press and hold to reset the device, power off, take a screenshot, or swap battery.
2	Scanner	Scans barcodes.
3	Microphone	Records audio.
4	Common Back IO	Enables data input and output.
5	Upper Accessory Attachment Point	Provides a point for attaching optional accessories.

Table 3 Back and Top Views (Continued)

Number	Item	Description
6	Battery Release Latches	The latches to release the battery.
7	Battery	Provides power to the device.
8	Lower Accessory Attachment Point	Provides a point for attaching optional accessories.
9	Indirect Time-of-Flight (iTOF)/ Ultra-wide Camera	Takes iTOF/Ultra-wide photos and videos. **NOTE:** This feature is only available on select SKUs.
10	Flash LED Lens	Provides illumination for the camera in low light conditions.
11	50MP Rear Camera	Takes photos and videos.

Figure 3 Bottom View

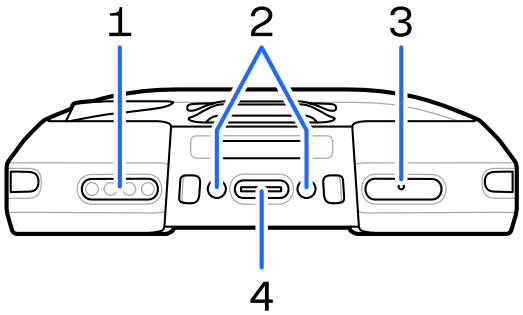

Table 4 Bottom View

Number	Item	Description
1	Speaker	Provides audio output for video and music playback. Provides audio in speakerphone mode.
2	Bottom IO Pins	Enables charging.
3	Microphone	Records audio.
4	USB-C 3.1 Port	Provides charging (primarily) and data communication with peripherals.

Setting Up the Device

This section describes setting up the TC701.

1. Install a SIM card (WWAN Only).
2. Install a micro Secure Digital (SD) card (optional).
3. Install the battery.
4. Install hand strap (optional).

5. Charge the device.
6. Power on the device.

Installing the MicroSD Card

This section describes the steps to install a microSD card in your TC701.

CAUTION: Follow proper electrostatic discharge (ESD) precautions to avoid damaging the microSD card. Proper ESD precautions include, but are not limited to, working on an ESD mat and ensuring the operator is properly grounded.

1. Power off the device.
2. Push both battery latches inward.

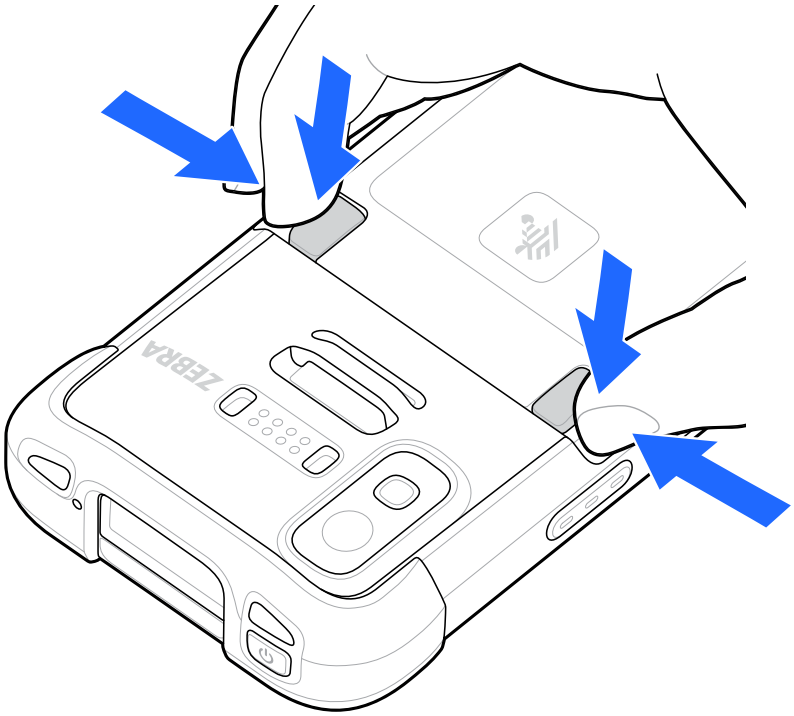

CAUTION: Do not attempt to insert fingers under the latches when pulling on the battery. Damage to the latches may occur.

3. While gripping the battery latches, lift the battery out of the device.

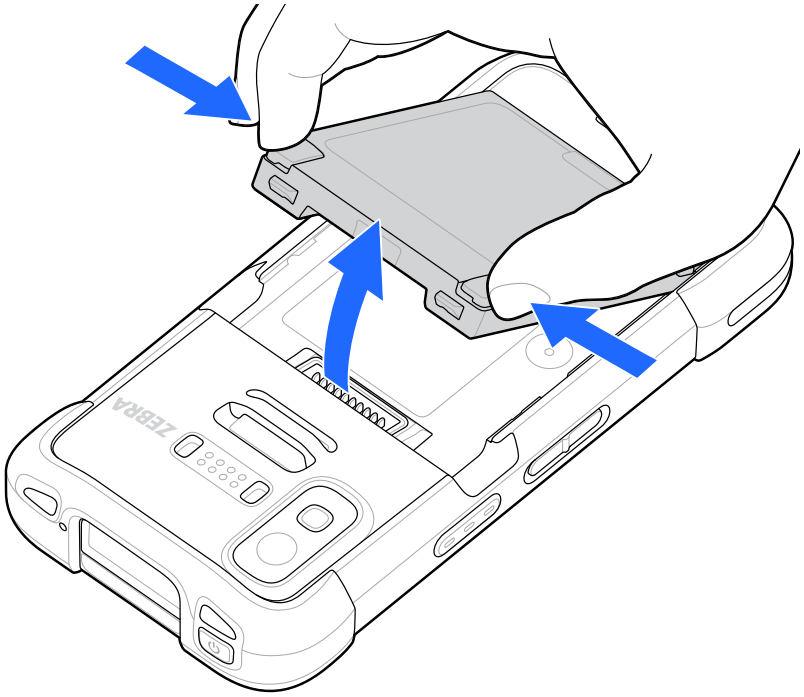

4. Pull the card holder out of the device.

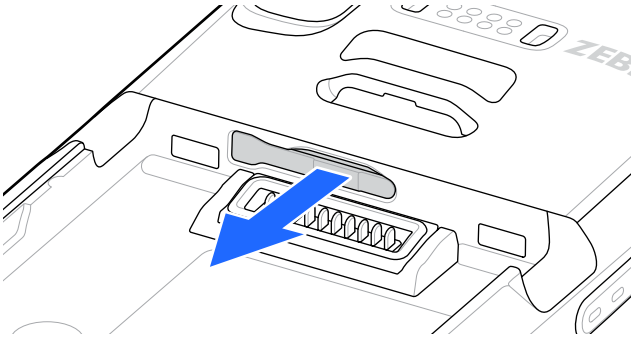

5. Flip over the card holder.
6. Place the microSD card into the card holder with the contacts facing up.

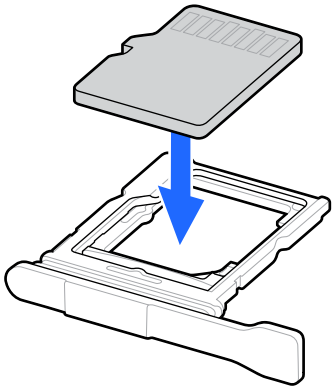

7. Flip over the card holder.

8. Insert the card holder back into the device.

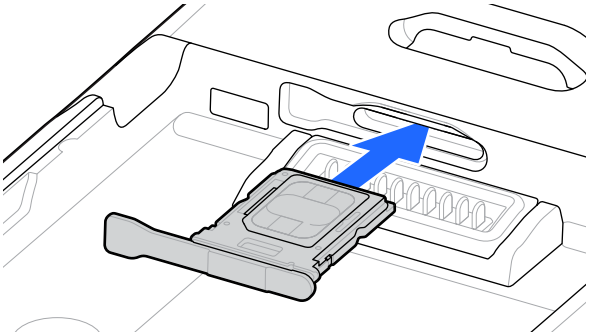

9. Insert the battery, bottom first, into the battery compartment in the back of the device.

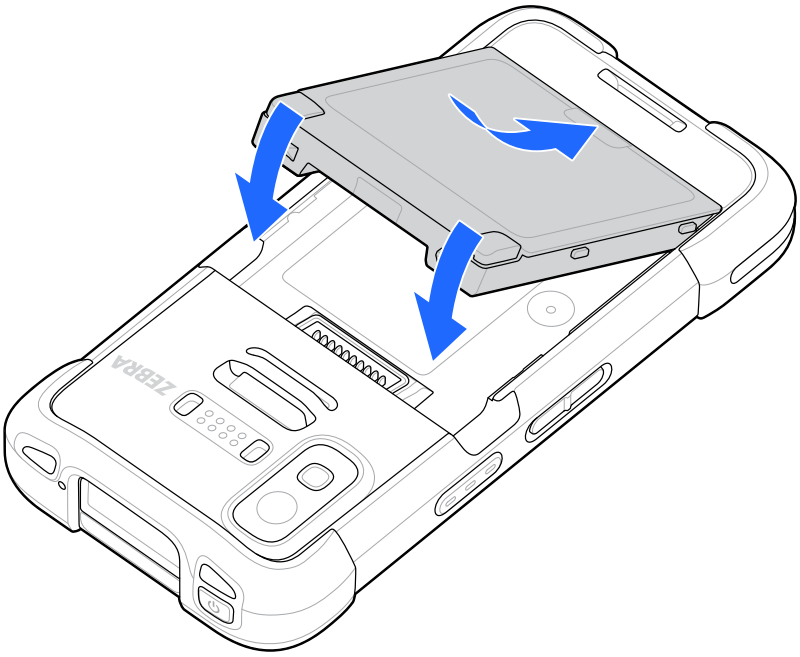

10. Press the battery down into the device until the release latches click into place.

Installing a SIM Card (WWAN Only)

This section describes the steps to install a SIM card in your TC701.

CAUTION: Follow proper electrostatic discharge (ESD) precautions to avoid damaging the SIM card. Proper ESD precautions include, but are not limited to, working on an ESD mat and ensuring the operator is properly grounded.

1. Power off the device.
2. Push both battery latches inward.

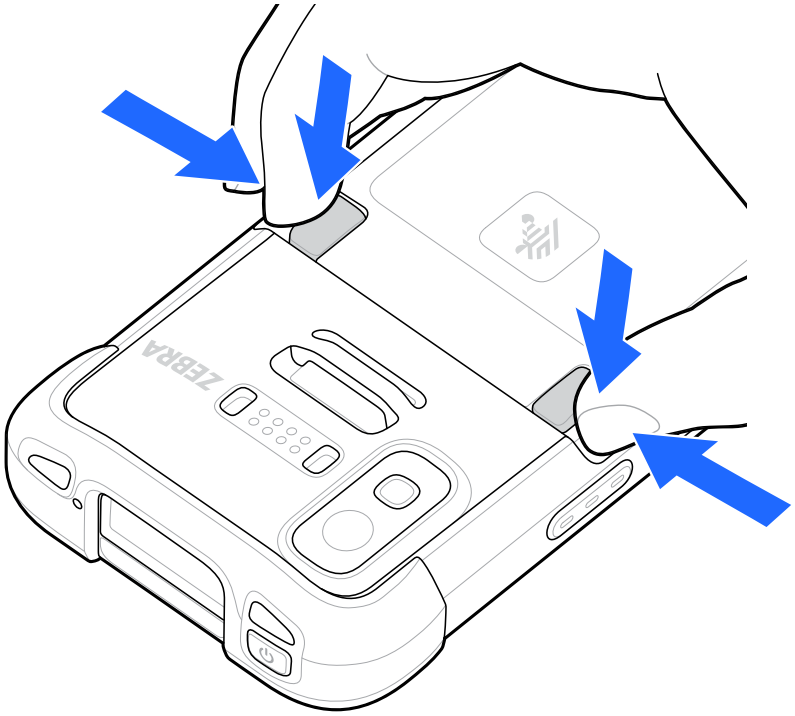

CAUTION: Do not attempt to insert fingers under the latches when pulling on the battery. Damage to the latches may occur.

3. While gripping the battery latches, lift the battery out of the device.

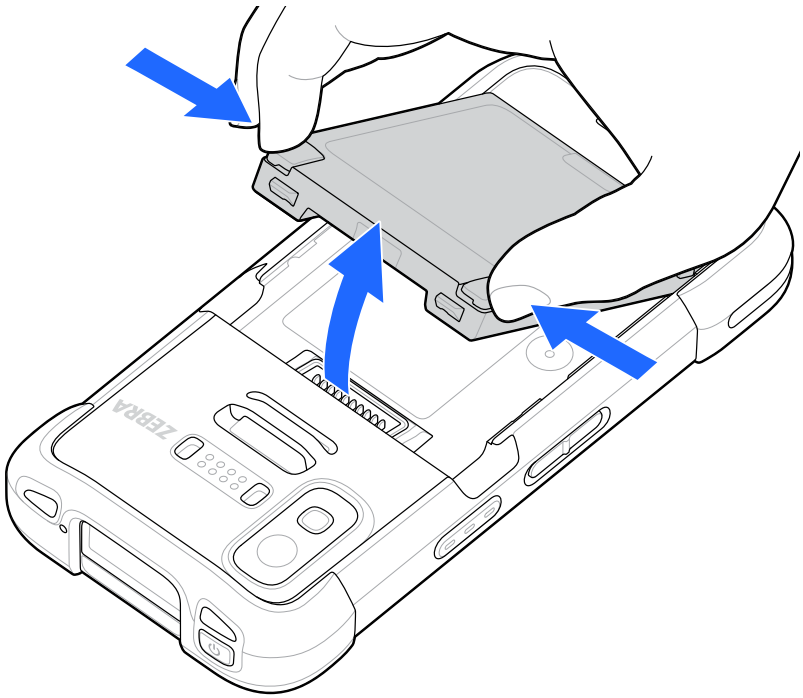

4. Pull the card holder out of the device.

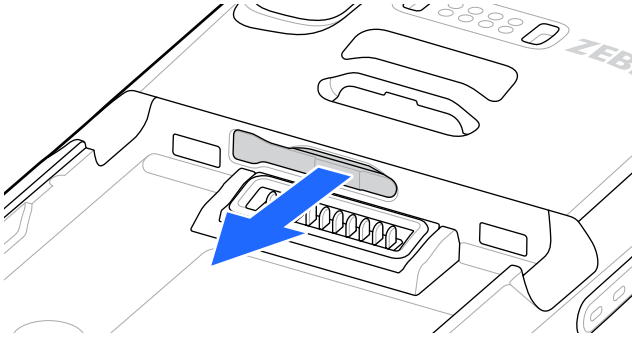

5. Place the SIM card into the card holder.

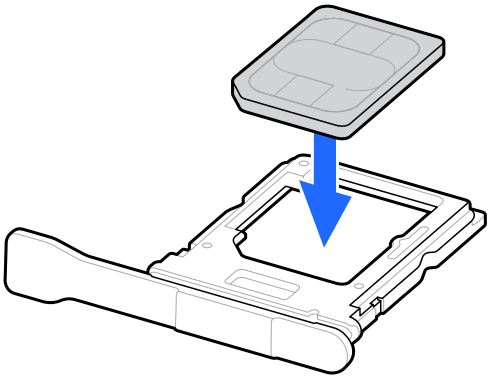

6. Insert the card holder back into the device.

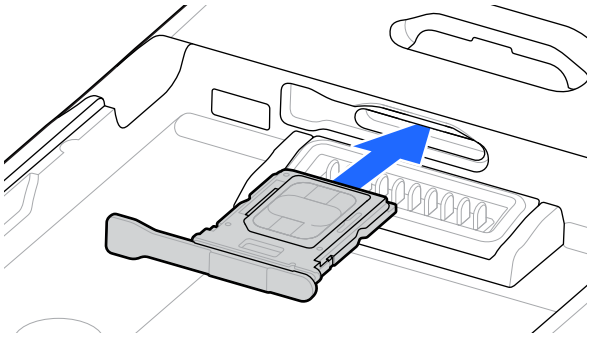

7. Insert the battery, bottom first, into the battery compartment in the back of the device.

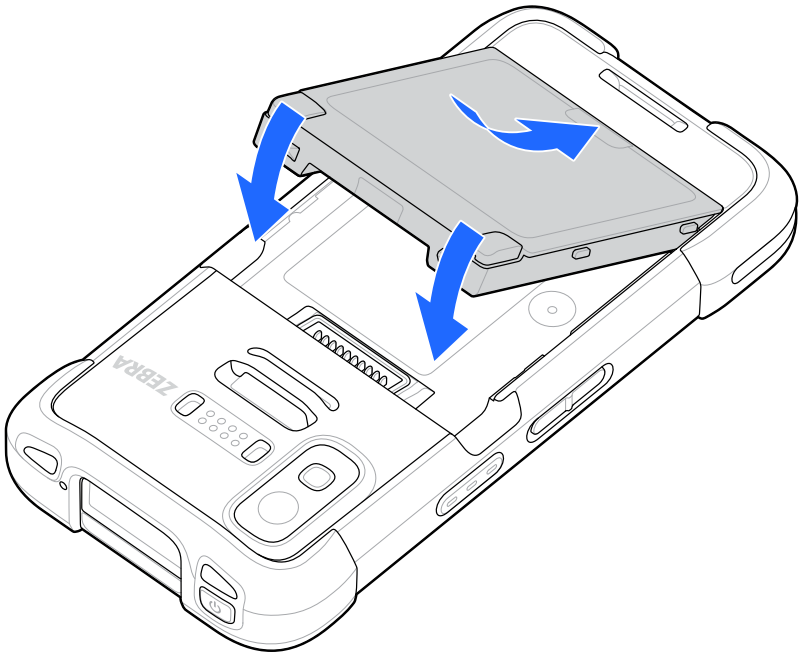

8. Press the battery down into the device until the release latches click into place.

Activating an eSIM

This section describes activating an eSIM.

NOTE: Before adding an eSIM, contact your carrier to obtain the eSIM service and its activation or QR code.

1. On the device, establish an internet connection via Wi-Fi or cellular data with an installed SIM card.
2. Go to **Settings** > **Network & internet**.
3. Tap **SIMs**.
4. If a SIM card is already installed, tap **+ Add more**.

   The **Mobile network** screen displays.
5. Select:
   - **MANUAL CODE ENTRY** to enter the activation code, or
   - **SCAN** to scan the QR code to download the eSIM profile.

   The Confirmation dialog box displays.
6. Tap **OK**.
7. Enter the activation code or scan the QR code.
8. Tap **NEXT**.

   The Confirmation dialog box displays.
9. Tap **ACTIVATE**, and then **Done**.

   The eSIM is now activated.

Deactivating an eSIM

Turn off an eSIM temporarily and re-activate it later.

1. On the device, establish an internet connection via Wi-Fi or cellular data with an installed SIM card.
2. Tap **Settings** > **Network & internet** > **SIMs**.
3. In the **Downloaded SIM** section, tap the name of the eSIM to deactivate.
4. Tap the **Use this SIM** switch to turn off the eSIM.

   The Confirmation dialog box displays.
5. Tap **Turn off**.

   The eSIM is deactivated.

Reactivating an eSIM

Once the eSIM is deactivated, you can reactivate it.

1. Touch the **Use this SIM** switch to turn on the eSIM.
2. Touch **Yes**.

   The eSIM is reactivated.

Erasing an eSIM Profile

Erasing an eSIM profile removes it completely from the device.

NOTE: After erasing an eSIM from the device, you cannot use it again.

1. On the device, establish an internet connection via Wi-Fi or cellular data with an installed SIM card.
2. Tap **Settings** > **Network & internet** > **SIMs**.
3. In the **Downloaded SIM** section, tap the name of the eSIM.
4. Tap **Erase eSIM**.

   The **Erase this eSIM?** message displays.
5. Tap **Erase**.

   The eSIM profile is now erased from the device.

Installing a Battery

This section describes how to install the TC701 battery.

NOTE: User modification of the device, particularly in the battery well, such as labels, asset tags, engravings, stickers, and so on, may compromise the intended performance of the device or accessories. Performance levels such as sealing (Ingress Protection (IP)), impact performance (drop and tumble), functionality, temperature resistance, etc. could be affected. DO NOT put any labels, asset tags, engravings, stickers, etc. in the battery well.

1. Insert the battery, bottom first, into the battery compartment in the back of the device.

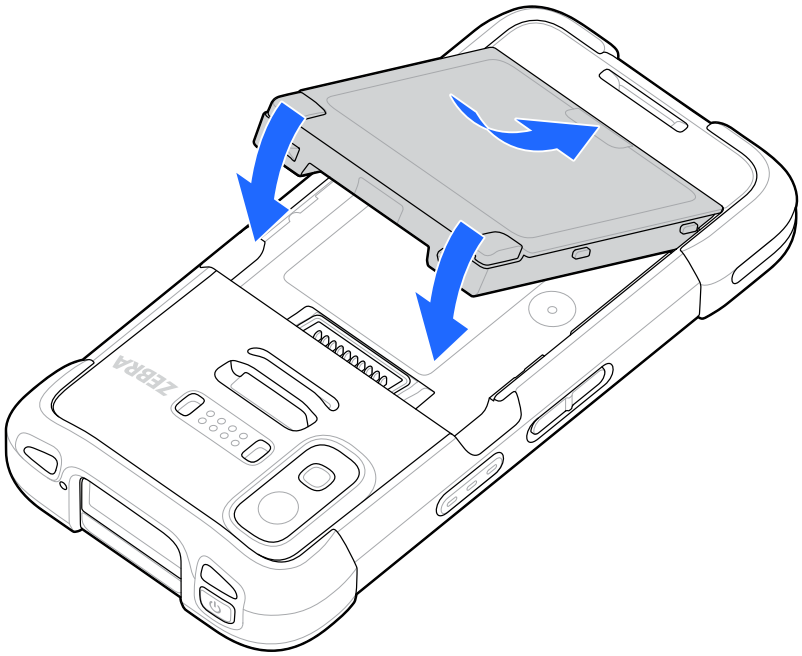

2. Press the battery down into the device until the release latches click into place.

Using the Rechargeable Li-Ion Battery with BLE Beacon

This device utilizes a rechargeable Li-Ion battery to facilitate BLE Beacon. Once enabled, the battery transmits a BLE signal for up to seven days while the device is powered off due to battery depletion.

NOTE: The device transmits a Bluetooth beacon only when the device is powered off or in Airplane Mode.

For additional information on configuring the Secondary BLE settings, go to techdocs.zebra.com/emdk-for-android/14-0/mx/beaconmgr/.

Charging the Device

This section provides information for charging the device.

1. To charge the main battery, connect the charging accessory to the appropriate power source.
2. Insert the device into a cradle or attach to a cable. The device turns on and begins charging. The Charging/Notification LED blinks amber while charging, then turns solid green when fully charged.

The device's Charging/Notification LED indicates the status of the battery charging in the device. The battery charges from fully depleted to 70% in approximately 45 minutes. To achieve the optimal charging results, use only Zebra charging accessories and batteries. Charge batteries at room temperature with the device in sleep mode.

Replacing the MicroSD Card

This section describes the steps to replace a microSD card in your TC701 device.

CAUTION: Follow proper electrostatic discharge (ESD) precautions to avoid damaging the microSD card. Proper ESD precautions include, but are not limited to, working on an ESD mat and ensuring the operator is properly grounded.

1. Power off the device.
2. Push both battery latches inward.

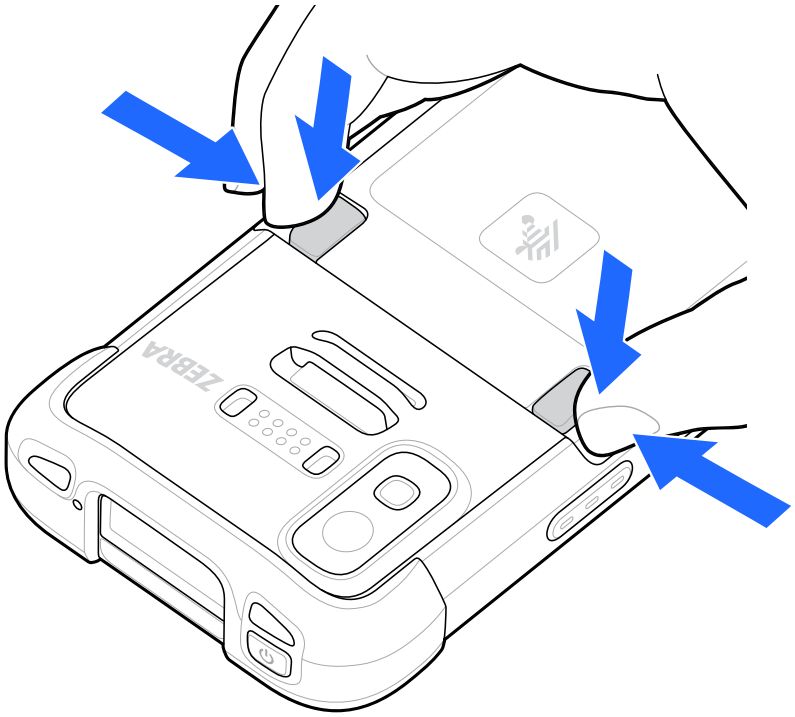

CAUTION: Do not attempt to insert fingers under the latches when pulling on the battery. Damage to the latches may occur.

3. While gripping the battery latches, lift the battery out of the device.

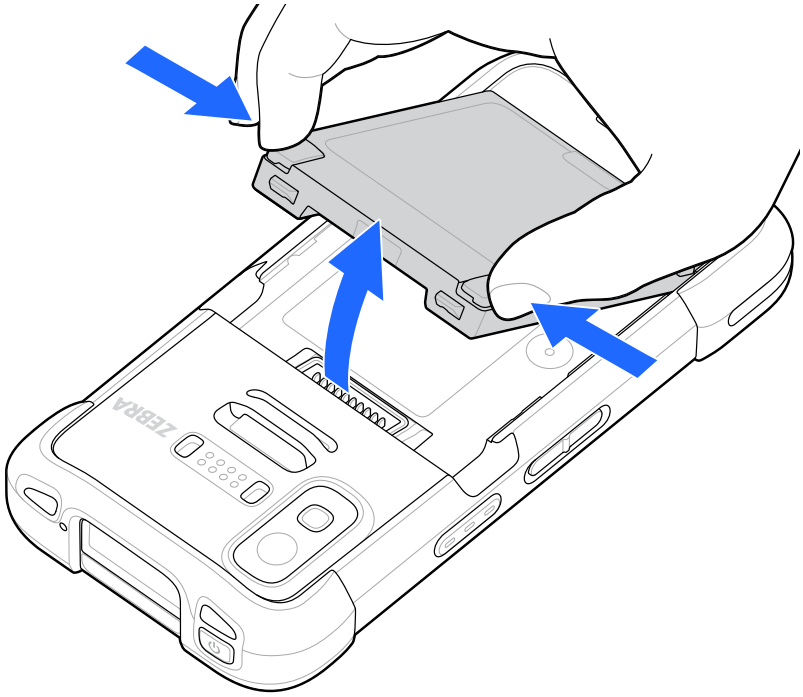

4. Pull the card holder out of the device.

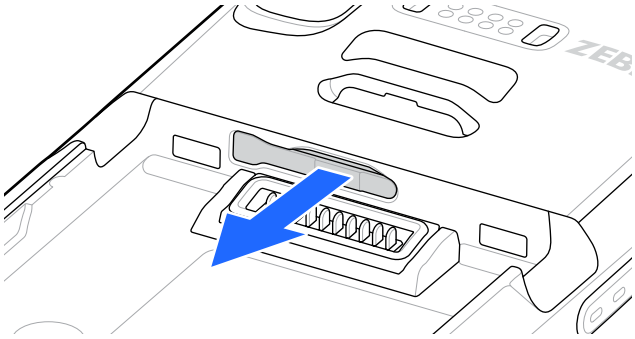

5. Remove the existing microSD card.
6. Place the replacement microSD card into the card holder with the contacts facing upwards.

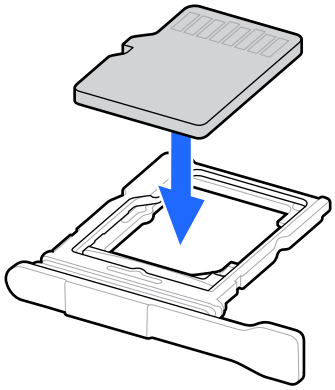

7. Insert the card holder back into the device.

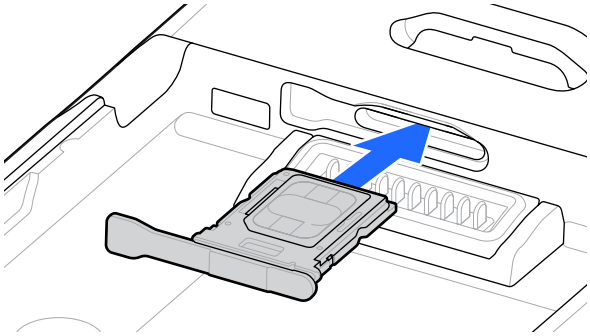

8. Insert the battery, bottom first, into the battery compartment in the back of the device.

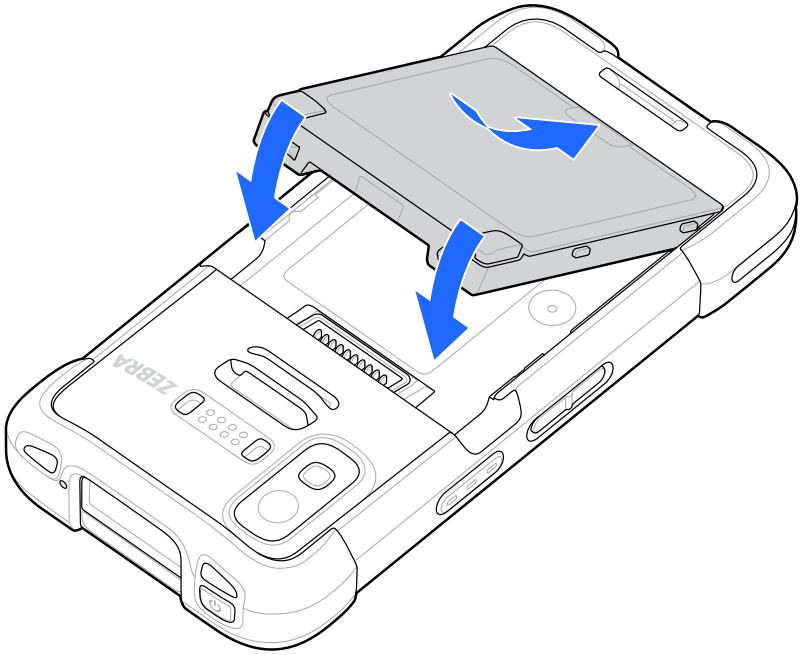

Replacing the SIM Card

This section describes the steps to replace a SIM card in your TC701 device.

CAUTION: Follow proper electrostatic discharge (ESD) precautions to avoid damaging the SIM card. Proper ESD precautions include, but are not limited to, working on an ESD mat and ensuring the operator is properly grounded.

1. Power off the device.
2. Push both battery latches inward.

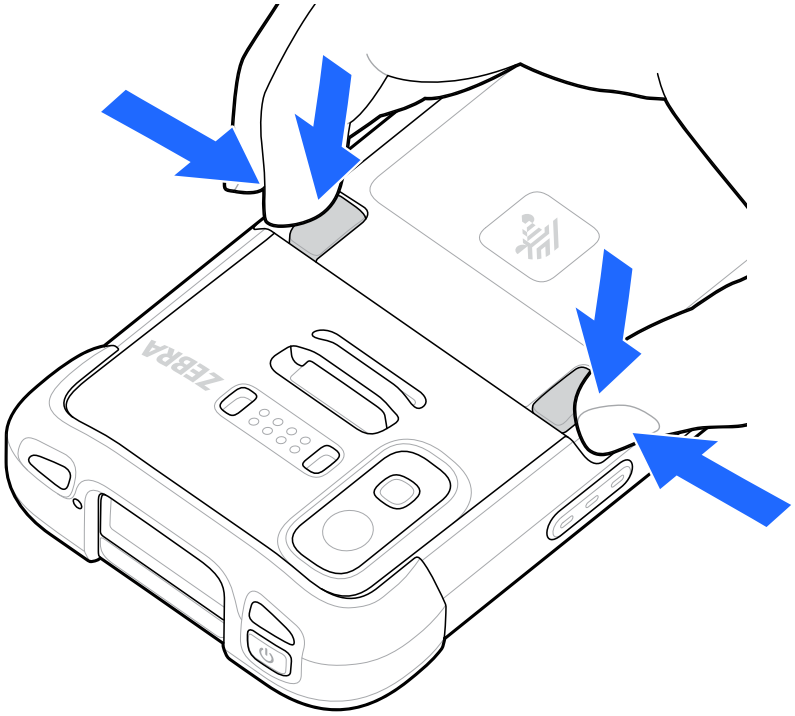

CAUTION: Do not attempt to insert fingers under the latches when pulling on the battery. Damage to the latches may occur.

3. While gripping the battery latches, lift the battery out of the device.

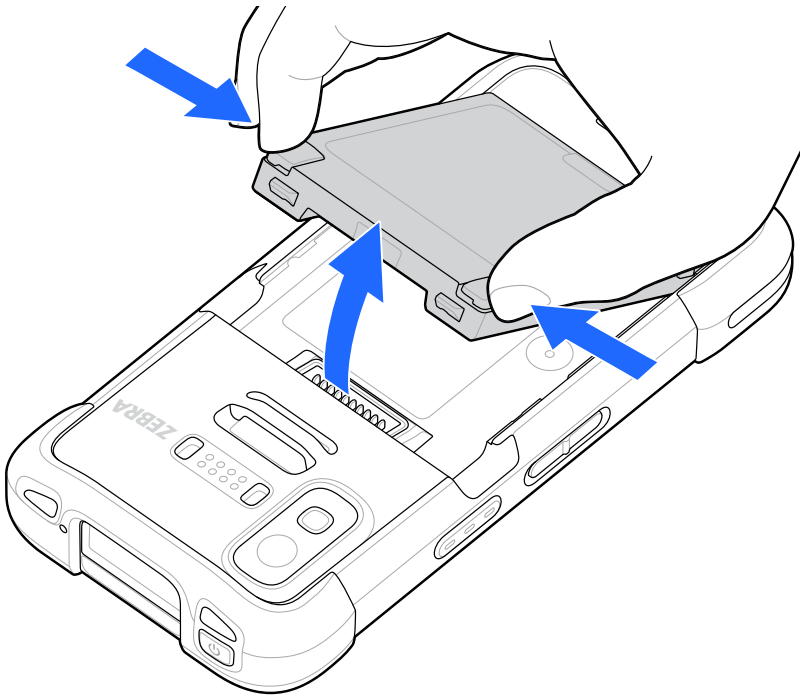

4. Pull the card holder out of the device.

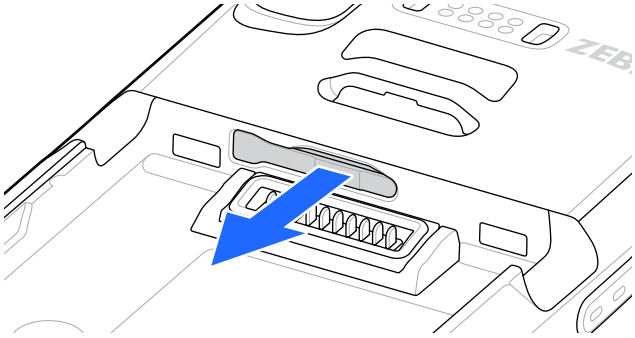

5. Remove the existing SIM card from the card holder.
6. Place the replacement SIM card into the card holder.

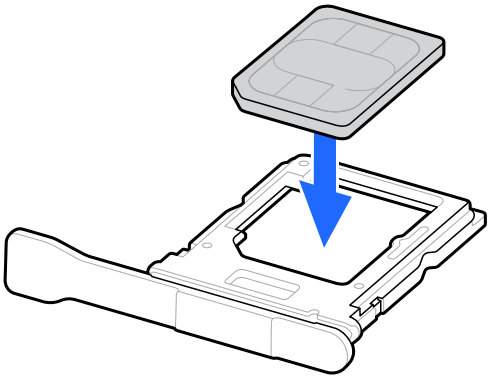

7. Insert the card holder back into the device.

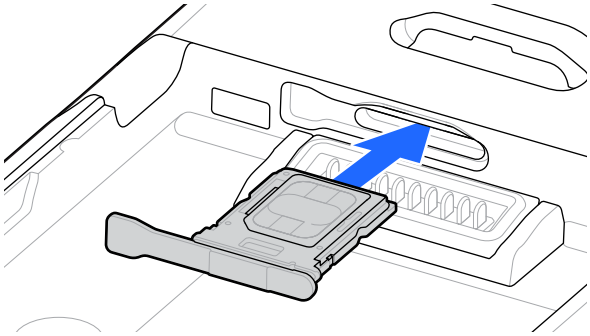

8. Insert the battery, bottom first, into the battery compartment in the back of the device.

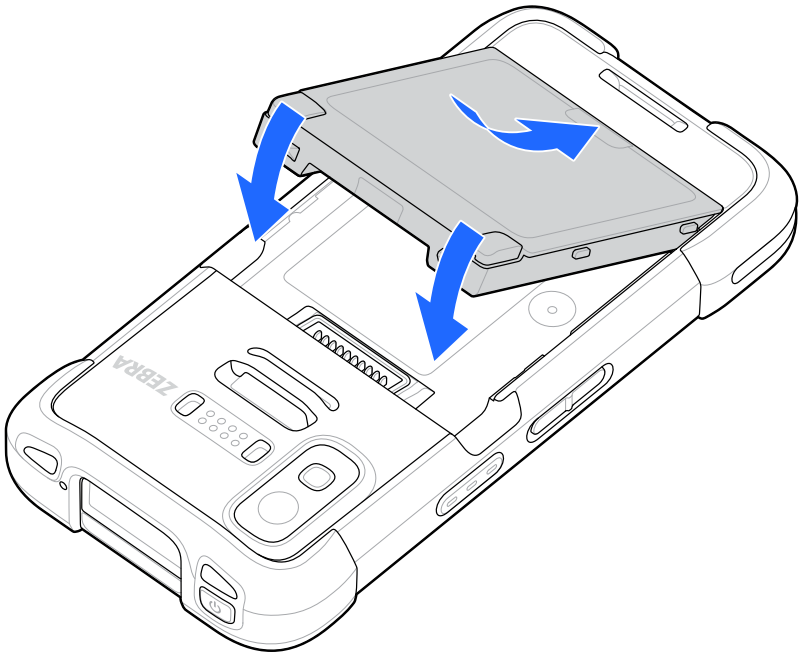

9. Press the battery down into the device until the release latches click into place.

Replacing the Battery

This section describes how to replace the TC701 battery.

NOTE: User modification of the device, particularly in the battery well, such as labels, asset tags, engravings, stickers, and so on, may compromise the intended performance of the device or accessories. Performance levels such as sealing (Ingress Protection (IP)), impact performance (drop and tumble), functionality, temperature resistance, etc. could be effected. DO NOT put any labels, asset tags, engravings, stickers, etc. in the battery well.

WARNING: Do not add or remove the SIM or microSD cards during battery replacement.

1. Power off the device.
2. Push both battery latches inward.

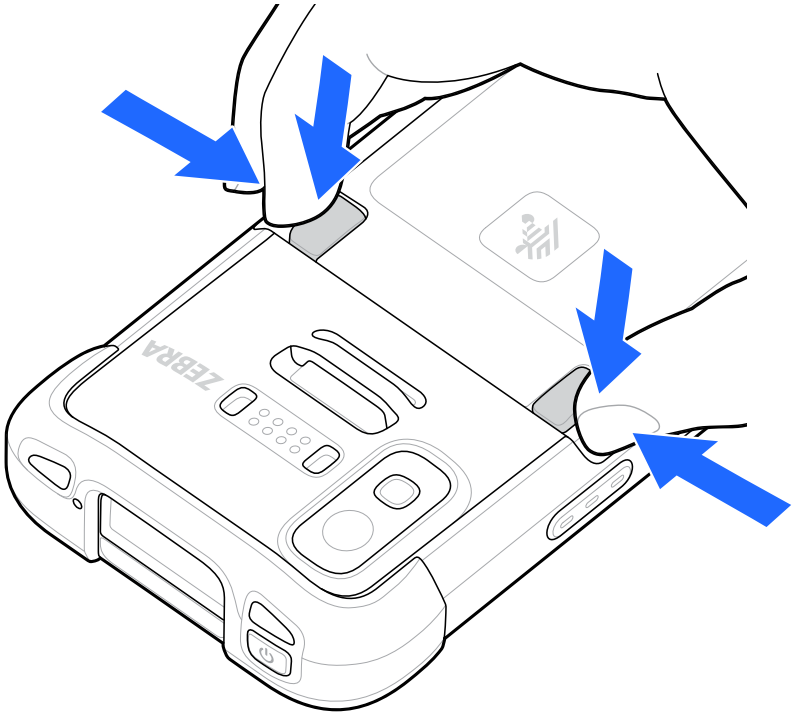

CAUTION: Do not attempt to insert fingers under the latches when pulling on the battery. Damage to the latches may occur.

3. While gripping the battery latches, lift the depleted battery out of the device.

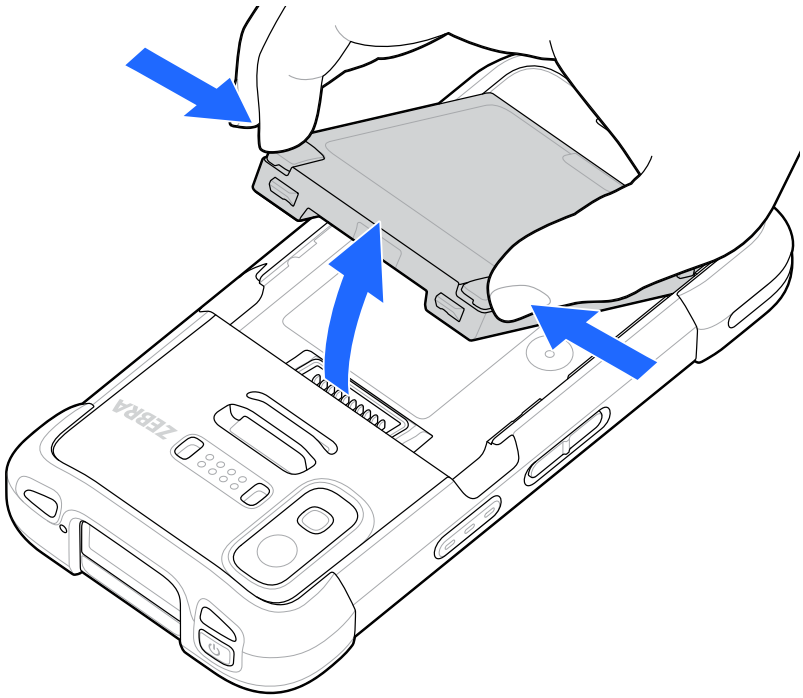

4. Insert the new battery, bottom first, into the battery compartment in the back of the device.

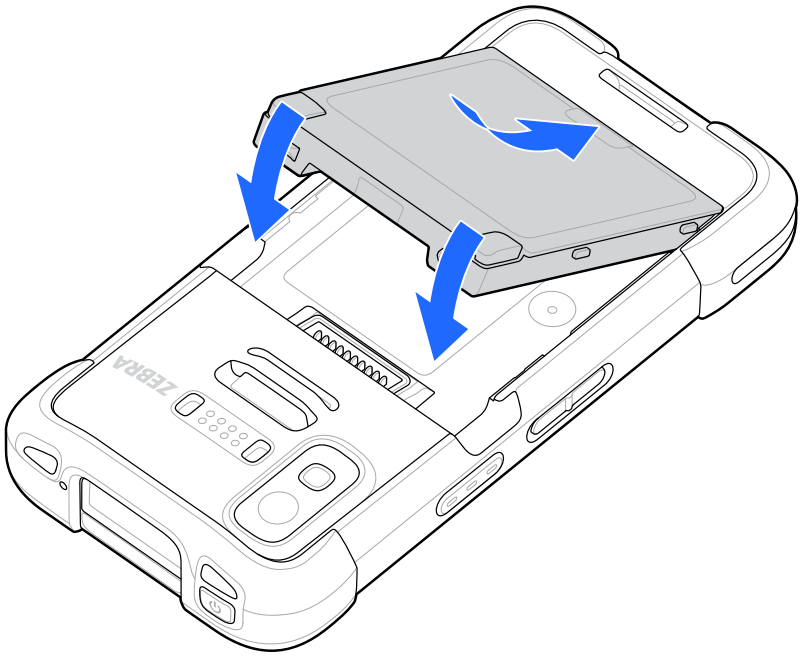

5. Press the new battery down into the device until the release latches click into place.

Using the Device

This section explains how to use your device.

Home Screen

Turn on the device to display the Home screen. Depending on how your system administrator configured your device, your Home screen may display differently than the graphics in this section.

After the device goes into Sleep mode, the Home screen displays with the lock slider. Touch the screen and slide up to unlock. The Home screen provides four additional screens to place widgets and shortcuts. Swipe the screen left or right to view the additional screens.

NOTE: By default, AOSP devices do not have the same icons on the Home screen as GMS devices. The following icons are for example only.

Home screen icons can be configured by the user and may look different than shown.

Figure 4 Home Screen

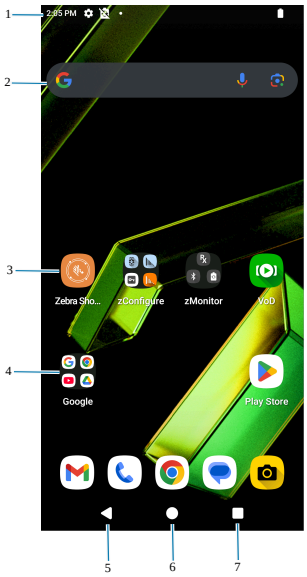

1	Status Bar	Displays the time, status icons (right side), and notification icons (left side).
2	Widgets	Launches stand-alone apps that run on the Home screen.

3	Shortcut icons	Opens apps installed on the device.
4	Folder	Contains apps.
5	Back	Displays the previous screen.
6	Home	Displays the home screen.
7	Recent	Displays recently used applications.

Setting the Home Screen Rotation

By default, the Home screen rotation is disabled.

NOTE: Auto-rotate must be enabled in the Quick Access panel or in Settings before the Home Screen Rotation setting can be used.

1. Touch and hold anywhere on the Home screen until the options display.
2. Touch **Home settings**.
3. Touch the **Allow Home screen rotation** switch.
4. Touch **Home**.
5. Rotate the device.

Status Bar

The Status bar displays the time, notification icons (left side), and status icons (right side).

If there are more notifications than can fit in the Status bar, a dot is displayed, indicating that more notifications exist. Swipe down from the Status bar to open the Notification panel and view all notifications and status.

Figure 5 Notifications and Status Icons

1	Notification icons
2	Status icons

Notifications Icons

Notification icons indicate app events and messages.

Table 5 Notification Icons

Icon	Description
	The main battery is low.

Table 5 Notification Icons (Continued)

Icon	Description
	Backup battery is not ready for hot swap.
	More notifications are available for viewing.
	Data is synching.
	Indicates an upcoming event. AOSP devices only.
	Indicates an upcoming event. GMS devices only.
	An Open Wi-Fi network is available. The device is not connected to it.
	Audio is playing.
	A problem with sign-in or sync has occurred.
	The device is uploading data.
	Animated: the device is downloading data. Static: the download is complete.
	The device is connected to or disconnected from a virtual private network (VPN).
	Preparing internal storage by checking it for errors.
	USB debugging is enabled on the device.
	Call is in progress (WWAN only).
	The mailbox contains one or more voice messages (WWAN only).
	A call is on hold (WWAN only).
	A call was missed (WWAN only).

Table 5 Notification Icons (Continued)

Icon	Description
	A wired headset with a boom module is connected to the device.
	A wired headset without a boom module is connected to the device.
	PTT Express Voice client status.
	The RxLogger app is running.
	A Bluetooth scanner is connected to the device.
	A ring scanner is connected to the device in HID mode.

Status Icons

Status icons display system information for the device.

Table 6 Status Icons

Icon	Description
	Alarm is active.
	Main battery is fully charged.
	Main battery is partially drained.
	Main battery charge is low.
	Main battery charge is very low.
	Main battery is charging.
	All sounds, except media and alarms, are muted. Vibrate mode is active.
	Do Not Disturb mode active.

Table 6 Status Icons (Continued)

Icon	Description
	Airplane Mode is active. All radios are turned off.
	Bluetooth is on.
	The device is connected to a Bluetooth device.
	Connected to a Wi-Fi network. Indicates the Wi-Fi version number.
	Not connected to a Wi-Fi network or no Wi-Fi signal.
	Connected to an Ethernet network.
	Speakerphone enabled.
	Portable Wi-Fi hotspot is active (WWAN only).
	Connect to a 6E network (WWAN only).
	Connect to a 5G network (WWAN only).
4G LTE	Connected to a 4G LTE/LTE-CA network (WWAN only).
4G	Connected to a DC-HSPA, HSDPA, HSPA+, HSUPA, LTE/LTE-CA or WCMDMA network (WWAN only).
3G	Connected to a 1x-RTT (Sprint), EGDGE, EVDO, EVDV or WCDMA network (WWAN only).
2G	Connected to a GPRS network (WWAN only).
3G	Connected to a WCDMA network (WWAN only).
H	Connected to a DC - HSPA, HSDPA, HSPA+ or HSUPA network (WWAN only).
E	Connected to an EDGE network (WWAN only).
G	Connected to a GPRS network (WWAN only).

Table 6 Status Icons (Continued)

Icon	Description
1X	Connected to a 1x-RTT (Verizon) network (WWAN only).
R	Roaming from a network (WWAN only).
	No SIM card installed (WWAN only).

Managing Notifications

Notification icons report the arrival of new messages, calendar events, alarms, and ongoing events. When a notification occurs, an icon displays in the Status bar with a brief description.

Figure 6 Notification Panel

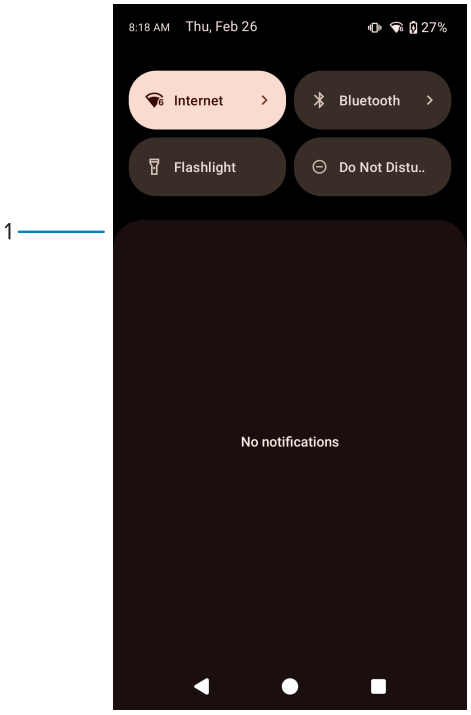

1	Notifications Panel

- To view a list of all notifications, open the Notification panel by dragging the Status bar down from the top of the screen.
- To respond to a notification, open the Notification panel and then touch a notification. The Notification panel closes and the corresponding app opens.
- To manage recent or frequently used notifications, open the Notification panel and then touch **Manage notifications**.

- Touch the toggle switch next to an app to turn off all notifications, or touch an app for more notification options.
- To clear all notifications, open the Notification panel and then touch **Clear all**.

  All event-based notifications are removed. Ongoing notifications remain in the list.
- To close the Notification panel, swipe the Notification panel up.

Opening the Quick Access Panel

Use the Quick Access panel to access frequently used settings (for example, Airplane mode).

NOTE: Not all icons are pictured. Icons may vary.

Figure 7 Quick Access Panel

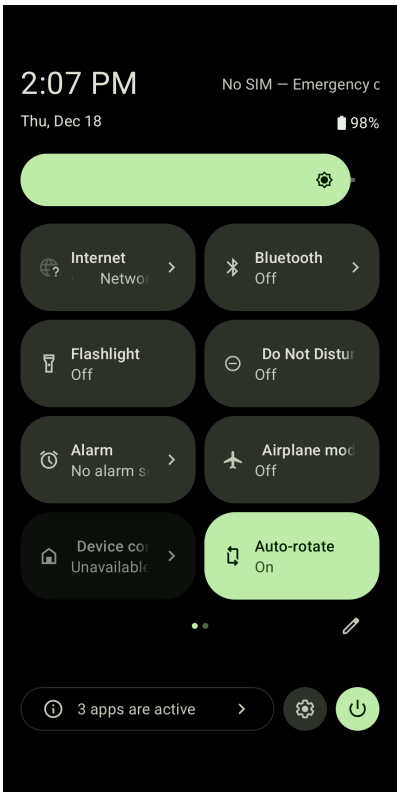

- If the device is locked, swipe down once.
- If the device is unlocked, swipe down once with two fingers, or twice with one finger.
- If the Notification panel is open, swipe down from the Quick Settings bar.

Quick Access Panel Icons

Quick Access panel icons indicate frequently used settings (for example, Airplane mode).

Table 7 Quick Access Panel Icons

Icon	Description
	Wi-fi - Turns Wi-Fi on or off. Touch and hold to see a list of available networks.
	Bluetooth - Turns Bluetooth on or off. Touch and hold to see a list of available devices.
	Flashlight - Turns the camera flash on or off to use as a flashlight.
	Do Not Disturb - Silences sounds and vibrations. Touch and hold to configure exceptions.
	Wallet - Accesses saved payment cards, passes, and tickets via Google Wallet.
	Auto-Rotate - Toggles automatic screen rotation on or off.
	Battery Saver - Turns on a power-saving mode to extend battery life.
	Airplane Mode - Turn Airplane mode on or off. When Airplane mode is on the device does not connect to Wi-Fi or Bluetooth.
	Screen Cast - Shares your device's screen with a nearby Cast-compatible device.
	Night Light -Tints the screen amber to make it easier to view in dim light.
	Extra Dim - Reduces screen brightness beyond the normal minimum level.
	Live Caption - Automatically captions media playing on the device.

Editing the Quick Access Tiles

The first four setting tiles from the Quick Access panel become the Quick Access tiles on the Notification panel.

1. Open the Quick Access panel.
2. Swipe down to open the Quick Settings menu.

3. Touch (1) to edit, add, or remove settings tiles.

Figure 8 Quick Settings Menu

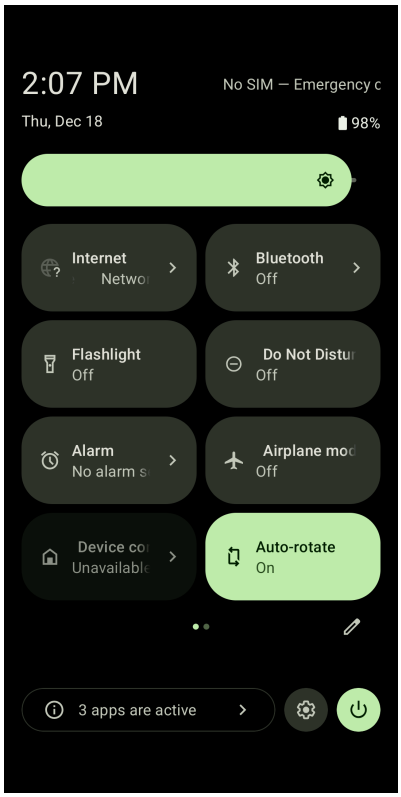

Battery Management

Observe the recommended battery optimization tips for the device.

- Set the screen to turn off after a short period of inactivity.
- Reduce screen brightness.
- Turn off all wireless radios when not in use.
- Turn off automatic syncing for Email, Calendar, Contacts, and other apps.
- Minimize the use of apps that keep the device from sleeping, for example, music and video apps.

NOTE: Before checking the battery charge level, remove the device from any AC power source (cradle or cable).

Checking Battery Status

Check the battery status through the Battery Information settings, the Battery Manager app, or the quick access panel.

- Open **Settings** and touch **About phone** > **Battery Information**. Or swipe up from the bottom of the screen and touch to open the **Battery Manager** app.

  Battery present status indicates if the battery is present.

Battery level lists the battery charge (as a percentage of fully charged).

- Swipe down from the status bar to open the quick access panel.

  The **battery percentage** is displayed next to the battery icon.

Charging Indications

The charging/notification LED indicates charging status.

Table 8 Charging/Notification LED Charging Indicators

State	LED	Indications
Off		Device is not charging. Device is not inserted correctly in the cradle or connected to a power source. Charger/cradle is not powered.
Slow Blinking Amber (one blink every four seconds)		Device is charging.
Solid Green		Charging complete.
Solid Red		Device is either charging or fully charged, but the battery is at end of useful life.
Fast Blinking Red (two blinks/second)		Charging error but the battery is at end of useful life, for example: • Temperature is too low or too high. • Charging has gone on too long without completion (typically 12 hours).

Monitoring Battery Usage

The Battery screen provides battery charge details and power management options to extend battery life. Different apps display different information. Some apps include buttons that open screens with settings to adjust power use.

1. Go to **Settings**.
2. Touch **Battery**.

To display battery information and power management options for a specific app:

3. Go to **Settings**.
4. Touch **Apps**.
5. Touch **See all apps**.
6. Touch an app.
7. Touch **App battery usage**.

Low Battery Notification

When the battery charge level drops below the charge level in the table below, the device displays a notice to connect the device to power. Charge the battery using one of the charging accessories.

Table 9 Low Battery Notification

Charge Level Drops Below	Action
18%	You should charge the battery soon.
10%	You must charge the battery.
4%	The device turns off. You must charge the battery.

Battery Hot Swap

The hot swap feature allows uninterrupted device operation by maintaining Wi-Fi/WAN connectivity and memory persistence during battery replacement. This feature uses a backup super capacitor to ensure seamless transitions.

Replacing the Main Battery using the hot swap feature allows the device to maintain Wi-Fi/WAN connectivity and memory persistence while replacing the depleted battery with a fully charged battery. When the battery is removed, the backup super capacitor immediately takes over to sustain the system, including Wi-Fi/WAN connectivity (covering voice, data, and the current state of applications) for up to 30 seconds.

After this 30-second window, the device enters emergency (critical) suspend mode to conserve energy. In this state, the memory is preserved (allowing the device to resume rather than reboot) for up to 60 seconds. If the battery is not replaced within 60 seconds, the memory persistence may be exhausted, and the device will reboot after the battery is charged and installed. It is important to note that the persistence durations of 30 seconds for Wi-Fi/WAN connectivity and 60 seconds for memory are maximum values. These durations can be reduced based on application usage, network conditions, and the device's currently used hardware features.

Performing a Battery Hot Swap

This section describes the method for performing a battery hot swap.

1. Remove any accessories blocking access to the battery.
2. Push both battery latches inward.

CAUTION: Do not attempt to insert fingers under the latches when pulling on the battery. Damage to the latches may occur.

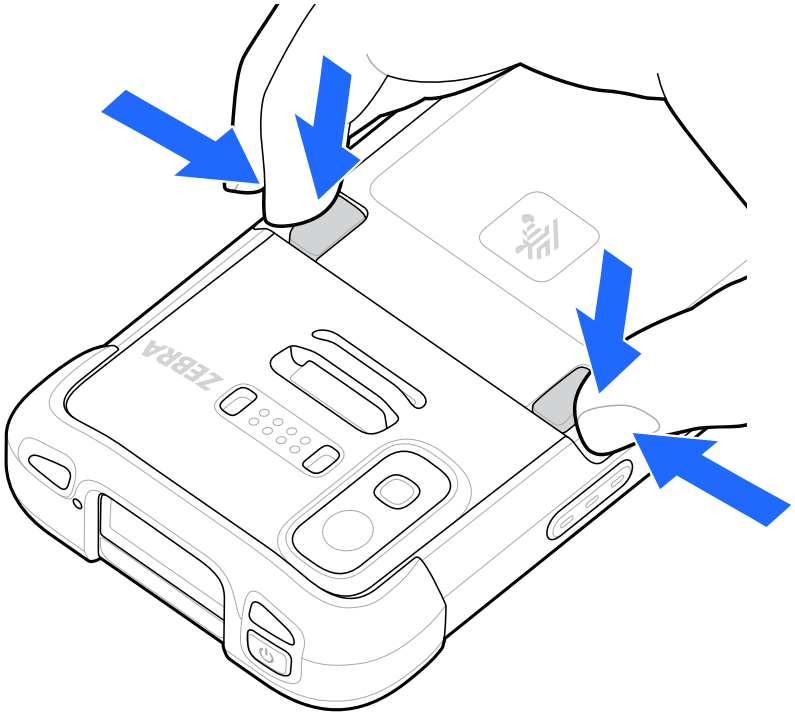

3. While gripping the battery latches, lift the depleted battery out of the device.

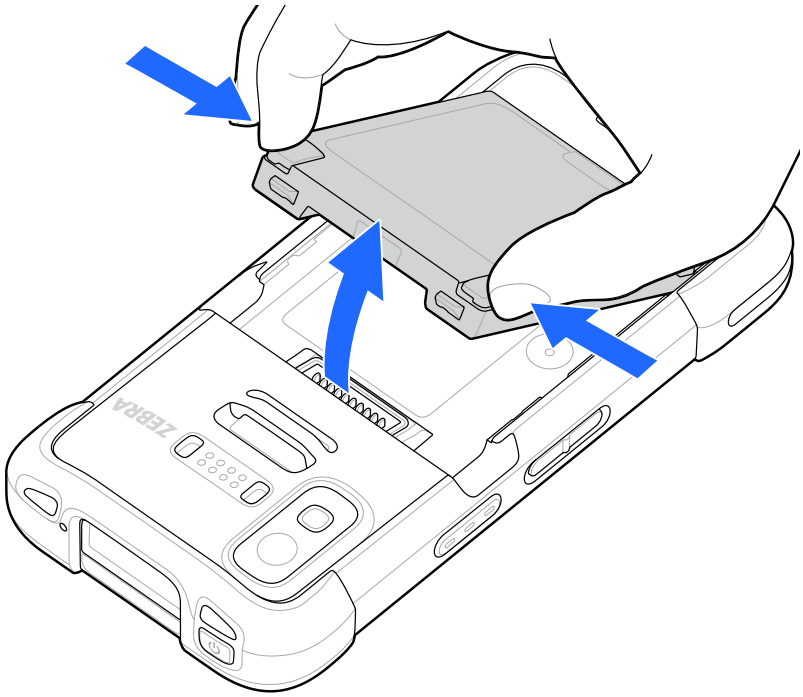

NOTE: If the battery is not replaced within 30 seconds, the device display turns off and the device enters into memory persistence state for an additional 60 seconds.

4. Insert the new battery, bottom first, into the battery compartment in the back of the device.

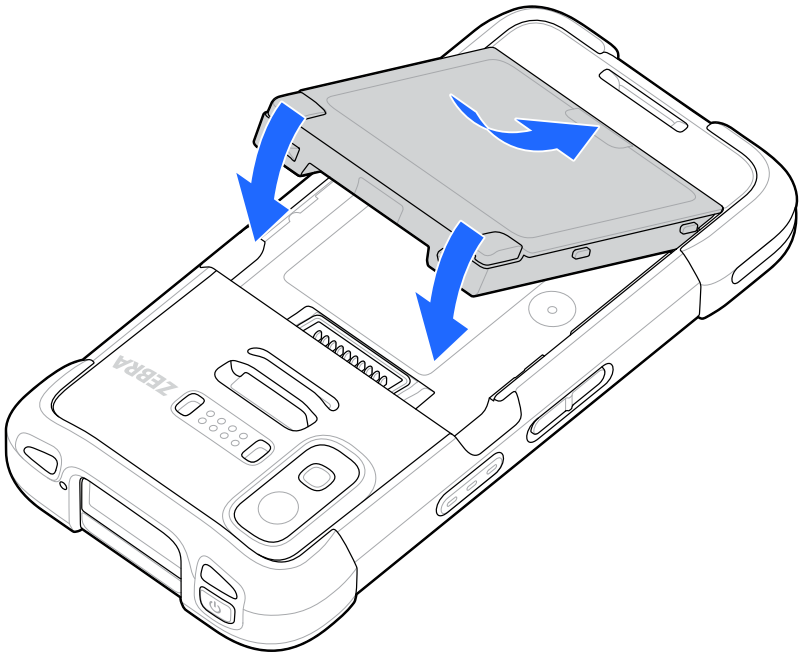

5. Press the new battery down into the device until the release latches click into place.

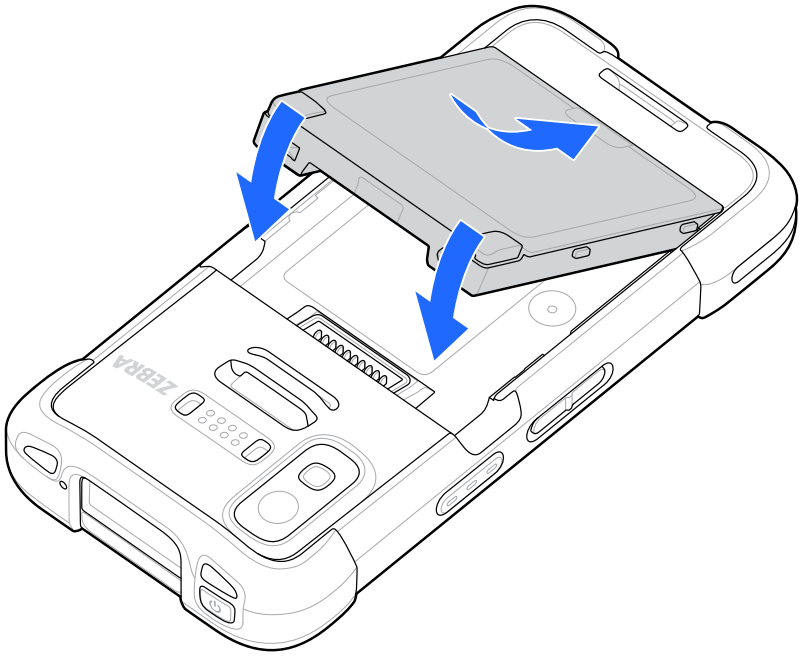

NOTE: If the device does not automatically turn on, press and hold the power button for six seconds, and the device reboots.

Turning Off the Radios

Enable Airplane Mode to disable all radio communications on your device. This single setting turns off Wi-Fi, cellular data, and Bluetooth simultaneously.

1. Swipe down from the Status bar to open the Quick Settings panel.
2. Touch Airplane mode. The airplane icon displays in the Status bar indicating that all the radios are off.

Interactive Sensor Technology

The device contains sensors that monitor movement, orientation, and ambient light.

- Gyroscope - Measures angular rotational velocity to detect rotation of the device.
- Accelerometer - Measures the linear acceleration of movement to detect the orientation of the device.
- Digital Compass - The digital compass or magnetometer provides simple orientation in relation to the Earth's magnetic field. As a result, the device always knows which way is North, so it can auto-rotate digital maps depending on the physical orientation of the device.
- Light Sensor - Detects ambient light and adjusts the screen brightness.
- Pressure Sensor - Detects pressure on the touchscreen (WWAN Only).

In order to take advantage of these sensors, applications use API commands. Refer to the Google Android Sensor APIs for more information. For information on the Zebra Android EMDK, go to: techdocs.zebra.com.

Waking the Device

The device goes into Sleep mode when you press **Power** or after a period of inactivity (set in the Display settings window).

1. To wake the device from Sleep mode, press **Power** or the configured wake-up sources.

   The Lock screen displays.
2. Swipe the screen up to unlock.
   - If the screen option is set to Swipe, the Home screen displays.
   - If either the PIN or Password screen unlock feature is enabled, a prompt displays. Enter the PIN or password to unlock the device and move to the Home screen.
   - If the Pattern screen unlock feature is enabled, the Pattern screen displays. Swipe the correct pattern between the dots to unlock the device and move to the Home screen.

NOTE: If you enter the PIN, password, or pattern incorrectly five times, you must wait 30 seconds before trying again.

If you forget the PIN, password, or pattern, contact your system administrator.

USB Communication

Connect the device to a host computer to transfer files between the device and the host computer.

When connecting the device to a host computer, follow the host computer's instructions for connecting and disconnecting USB devices, to avoid damaging or corrupting files. For information on USB communication accessories available for this device, see Accessories.

Transferring Files

Use the Transfer files option to copy files between the device and the host computer.

1. Connect the device to a host computer using a USB accessory.
2. On the device, pull down the Notification panel and touch **Charging this device via USB**.

   By default, **No data transfer** is selected.
3. Touch **File Transfer**.

NOTE: After changing the setting to **File Transfer**, and then disconnecting the USB cable, the setting reverts back to **No data transfer**. If the USB cable is reconnected, select **File Transfer** again.

4. On the host computer, open **File Explorer**.
5. Locate the **device** as a portable device.
6. Open the SD card or the Internal storage folder.
7. Copy files to and from the device or delete files as required.

Transferring Photos

Use PTP to copy photos from the device to the host computer.

1. Connect the device to a host computer using a USB accessory.
2. On the device, pull down the Notification panel and touch **Charging this device via USB**.
3. Touch **Transfer photos PTP**.
4. On the host computer, open a file explorer application.
5. Open the SD card or the Internal storage folder.
6. Copy or delete photos as required.

Disconnecting from the Host Computer

NOTE: Carefully follow the host computer's instructions to unmount the microSD card and disconnect USB devices correctly to avoid losing information.

1. On the host computer, unmount the device.
2. Remove the device from the USB accessory.

Settings

This section describes the settings on the device.

Accessing Settings

There are multiple ways to access settings on a device.

- Swipe down from the top of the Home screen to open the Quick Access panel and touch ⚙.
- Swipe up from the bottom of the Home screen to open APPS and touch **Settings**.

Display Settings

Use Display settings to change the screen brightness, enable night light, change the background image, enable screen rotation, set screen timeout, enable dark theme, and change font size.

Setting the Screen Brightness Automatically

Automatically adjust the screen brightness using the built-in light sensor.

1. Go to **Settings** > **Display**.
2. Touch **Adaptive brightness** to toggle the feature on or off.

   When enabled, the screen brightness automatically adjusts to your environment and activities.

Setting the Screen Brightness Manually

Manually set the screen brightness using the touchscreen.

1. Swipe down with two fingers from the Status bar to open the Quick Access panel.
2. Slide ⚙ left or right to adjust the screen brightness level.

Setting Night Light

The Night Light setting tints the screen amber, making the screen easier to look at in low light.

1. Go to **Settings**.
2. Touch **Display**.

3. Touch **Night Light**.
4. Touch **Schedule**.
5. Select one of the schedule values:
   - **None** (default)
   - **Turns on at custom time**
   - **Turns on from sunset to sunrise**
6. By default, **Night Light** is disabled. Touch **Use Night Light** to enable.
7. Adjust the tint using the **Intensity** slider.

Setting Screen Rotation

By default, the screen rotation is enabled.

1. Go to **Settings**.
2. Touch **Accessibility** > **System controls**.
3. Touch **Auto-rotate screen**.
4. Touch **Home**.

Setting Screen Timeout

The screen turns off and goes into Sleep mode after the selected period of inactivity.

1. Go to **Settings**.
2. Touch **Display** > **Screen timeout**.
3. Select one of the sleep values:
   - **15 seconds**
   - **30 seconds**
   - **1 minute** (default)
   - **2 minutes**
   - **5 minutes**
   - **10 minutes**
   - **30 minutes**

Setting Lock Screen Notifications

The lock screen display setting wakes the screen when notifications are received.

1. Go to **Settings**.
2. Touch **Display**.
3. Touch **Lock screen**.
4. You can enable or disable an option using the toggle switch.

Setting Font and Display Size

Set the size of the font and display in system apps.

1. Go to **Settings**.
2. Touch **Display**.
3. Touch **Display size and text**.
4. Use the size **+** and **-** slider to vary the size of the font and the display accordingly.

Setting Notification LED Brightness Level

Adjust the brightness of the notification LED.

1. Go to **Settings** > **Display**.
2. Touch **Notification LED Brightness Level**.
3. Use the slider to set the brightness value.

   The default value is 15.

Setting Touch Panel Mode

The display is able to detect touches using a finger, a fiber-tipped stylus, a plastic stylus, or a gloved finger.

NOTE: A glove can be made of medical latex, leather, cotton, or wool. For optimal performance, use a Zebra-certified stylus.

1. Go to **Settings**.
2. Touch **Display**.
3. Touch **Touch panel mode**.
4. Select:
   - **Stylus and Finger (Screen Protector OFF)** to use a finger (no gloves) and a stylus (plastic stylus only) on the unprotected screen.
   - **Glove and Finger (Screen Protector OFF)** to use a gloved finger or a finger on the unprotected screen.
   - **Stylus and Finger (Screen Protector ON)** to use a finger (no gloves) and a stylus (plastic stylus only) on the protected screen.
   - **Glove and Finger (Screen Protector ON)** to use a gloved finger or a finger on the protected screen.
   - **Finger Only** to use a finger (no gloves) on the screen.
5. Touch **Home**.

Setting the Date and Time

The date and time are automatically synchronized using a NITZ server when the device is connected to a cellular/wireless network. You are only required to set the time zone or set the date and time if

the wireless LAN does not support Network Time Protocol (NTP) or when not connected to a cellular/ wireless network.

1. Go to **Settings**.
2. Touch **System** > **Date & time**.
3. Touch **Set time automatically** to disable automatic date and time synchronization.
4. Touch **Set automatically** to disable automatic time zone synchronization.
5. Touch **Date** to select the date in the calendar.
6. Touch **OK**.
7. Touch **Time**.
   a) Touch the circle, drag to the current hour, and then release.
   b) Touch the circle, drag to the current minute, and then release.
   c) Touch **AM** or **PM**.
8. Touch **OK**.
9. Touch **Time zone** to select the current time zone from the list.
10. Touch **Update Interval** to select an interval to synchronize the system time from the network.
11. Under Time Format, choose either **Use locale default** or **Use 24-hour format**.

General Sound Setting

Press the volume buttons on the device to display on-screen volume controls.

Use the Sound settings to configure media and alarm volumes.

1. Go to **Settings**.
2. Touch **Sound & vibration**.
3. Touch an option to set sounds.

Sound Options

The Sound Options menu allows users to customize and manage their device's audio and vibration settings to suit their preferences.

- **Zebra volume controls:**
  - **Media volume** - Controls the music, games, and media volume.
  - **Call volume** - Controls the volume during a call.
  - **Ring volume** - Controls the ringtone volume.
  - **Notification volume** - Controls the notification volume.
  - **Alarm volume** - Controls the alarm clock volume.
  - **Do Not Disturb** - Mutes some or all sounds and vibrations.
  - **Live Caption** - Automatically caption speech.
  - **Media** - Shows the media player in Quick Settings while sound is playing, allowing quick access.

- **Vibration & haptics:**
  - **Ring vibration** - Vibrate the device when the phone rings.
  - **Notification vibration** - Vibrate the device when a notification comes in.
  - **Alarm vibration** - Vibrate the device when an alarm goes off.
  - **Touch feedback** - Vibrate the device when making screen selections.
  - **Media vibration** - Enable vibration when using a media player.
- **Default notification sound** - Select a sound to play for all system notifications.
- **Default alarm sound** - Select a sound to play for alarms.
- **Screen locking sound** - Play a sound when locking and unlocking the screen (default - enabled).
- **Charging sounds and vibration** - Play a sound and vibrate when power is applied to the device (default - enabled).
- **Tap & click sounds** - Play a sound when interacting with the screen (default - enabled).
- **Always show icon when in vibrate mode** - Enable the vibrate mode status bar icon.

Zebra Volume Controls

In addition to the default sound settings, Zebra Volume Controls display when the volume buttons are pressed.

Zebra Volume Controls are configured using Audio Volume UI Manager (AudioVolUIMgr). Administrators can use AudioVolUIMgr to add, delete and replace Audio Profiles, select an Audio Profile to use the device, and modify the default Audio Profile. For information on how to configure Zebra Volume Controls using AudioVolUIMgr, go to techdocs.zebra.com.

Accessibility Settings

The Accessibility settings menu is the central hub where users can find and customize all the accessibility features available on their device. From this menu, you can enable and configure a wide range of options to make your device easier to use.

Screen Reader Options

Screen readers provide auditory output of on-screen content, enabling users who are blind or have low vision to navigate the device and understand its content.

Configuring TalkBack

TalkBack provides spoken feedback, allowing you to use your device without needing to look at the screen. It is designed for users who have difficulty seeing the screen.

When TalkBack is active, the device's touch gestures change.

TalkBack Gestures:

- **Navigate:** Swipe right to move to the next item or left to move to the previous item.
- **Select:** Double-tap the screen to activate the selected item.

- **Drag:** Use two fingers to drag the screen up or down.
- **Adjust Volume:** Hold one finger on the screen and press the **Volume Up** or **Volume Down** buttons to adjust the accessibility volume.

1. Touch **Use TalkBack**.

   The **Allow TalkBack to have full control of your device?** message displays.
2. Touch **Allow**.

   An onboarding screen for TalkBack displays.
3. To navigate the onboarding tutorial, listen to the information and complete the following steps:
   a) Swipe left or right until you hear "next."
   b) Double-tap the screen to move to the next section.
   c) Repeat the previous two steps to progress through all sections.
4. To exit the tutorial, swipe left or right until you hear "finish."
5. Double-tap the screen.

Display Accessibility Options

The display accessibility options allow for the modification of on-screen elements to enhance visibility and legibility for users with low vision.

Configuring Select to Speak

Select to Speak allows you to hear selected text read and certain selections, like icons, described aloud.

1. Touch **Settings**.
2. Touch **Select to Speak shortcut** to enable the setting.

   The **Allow Select to Speak to have full control of your device?** screen displays.
3. Touch **Allow**.

   The **Accessibility button shortcut** screen displays.
4. Touch **Got it**.
5. Touch **Text to speech settings** to access the text-to-speech output menu.
   a) Touch **Preferred engine** to change the preferred text-to-speech engine.

      The default preferred engine is Speech Recognition and Synthesis from Google.
   b) Touch **Language** to change the language of text-to-speech.

      The default language is the system language.
   c) Use the **Speech rate** slider to change the rate of speech speed.
   d) Use the **Pitch** slider to change the pitch of the speech
6. To change the reading voice, touch **Change reading voice**.

NOTE: The option to change reading voices is only available if you have your language set to English.

7. To have the text-to-speech run in the background, touch **Read in background**.
8. To have the text-to-speech read text on images, touch **Read text on images**.
9. To request help or provide feedback, touch **Help & feedback**.
10. To change developer settings, touch **Developer settings**.

CAUTION: Developer settings are intended for debug mode only.

   a) To capture screen content's layout information to system logs, touch **Enable taking snapshot**.
   b) To capture more detailed screen content, touch **Allow snapshot to take detail information**.

CAUTION: Personal information may be captured.

Setting Font and Display Size

Set the size of the font and display in system apps.

1. Go to **Settings**.
2. Touch **Display**.
3. Touch **Display size and text**.
4. Use the size **+** and **-** slider to vary the size of the font and the display accordingly.

Configuring Color and Motion Settings

The color and motion settings help users with visual impairments by offering Color Correction (adjusts colors for color blindness, such as grayscale) and Reduced Motion (minimizes animations) to improve readability, reduce eye strain, and potentially improve performance.

1. To configure color correction, touch **Color correction**.
   a) Touch one of the following options:
      - Red-green (Deuteranomaly)
      - Red-green (Protanomaly)
      - Blue-yellow (Tritanomaly)
      - Grayscale
   b) Touch the **Use color correction** toggle to enable your changes to be used.
2. To invert all screen colors, touch **Color inversion** > **Use color inversion**.
3. To use a black background, touch **Dark theme** > **Use Dark theme**.

   A dark theme can help conserve battery life and reduce eye strain.
4. To reduce on-screen movement, touch **Remove animations**.
5. To make the mouse pointer more noticeable, touch **Large mouse pointer**.

NOTE: The **Large mouse pointer** setting is only applicable if you are pairing your device with a mouse.

Configuring Extra Dim

Extra dim makes your screen dimmer, ensuring it is more comfortable to read.

1. To enable the extra dim mode, touch the **Extra dim** toggle.
2. To configure additional extra dim settings, touch **Extra dim** > **Make screen extra dim**.
   a) Adjust the slider left to make the screen dimmer or adjust it right to make the screen brighter.
   b) To maintain these settings, touch the **Keep on after device restarts** toggle.

Configuring Magnification

Magnification allows you to zoom in on the screen, making content larger and easier to see.

To configure how magnification works on your device, follow these steps.

1. To enable a shortcut for the magnifier, tap **Magnification shortcut** and select one of the following options:
   - **Accessibility button** - Enables a floating button on the screen that you can tap to activate magnification.
   - **Volume keys** - Allows you to press and hold both volume keys simultaneously to activate magnification.
   - **Advanced** > **Triple tap** - Allows you to triple-tap the screen to activate magnification.
2. To select whether to magnify the full screen, a portion of the screen, or to switch between these modes, tap **Magnification type**.
   a) To magnify the entire screen, tap **Magnify full screen**.
   b) To magnify a part of the screen within a window, tap **Magnify part of screen**.
   c) To enable switching between full and partial screen magnification, tap **Switch between full and partial screen**.

      This option displays a settings icon ⚙ in the bottom-right corner of the magnified area. Tap this icon to switch between magnification types at any time.
3. To have the magnifier automatically follow the text cursor as you type, enable the **Magnify typing** toggle.
4. To keep magnification active when switching between apps, enable the **Keep on while switching apps.** toggle.
5. To zoom in and control the magnified view:
   a) Activate magnification using your chosen shortcut.
   b) Tap anywhere on the screen to enter the magnified view.
   c) Drag two fingers apart or together to adjust the zoom level.
   d) Use the shortcut again to deactivate magnification.
6. To zoom in temporarily (full screen mode only):
   a) Ensure your magnification type is set to full screen.
   b) Activate magnification using your chosen shortcut.
   c) Touch and hold anywhere on the screen.

d) While holding, drag your finger to navigate around the screen.

e) Lift your finger to exit temporary magnification.

Interaction Controls

The interaction controls options allow for the comprehensive modification of interactive elements, enabling users to customize their experience for enhanced accessibility, usability, and personal preference.

Configuring the Accessibility Menu

The Accessibility Menu provides a large on-screen menu to control your device. You can lock your device, control volume and brightness, take screenshots, and more.

1. To enable the accessibility menu, touch **Accessibility Menu** > **Accessibility Menu shortcut**.

   The **Allow Accessibility Menu to have full control of your device?** screen displays.
2. Touch **Allow**.
3. To increase on-screen button size, touch **Settings** > **Large buttons**.

Configuring Switch Access

Switch Access enables external switches, such as buttons or keyboards, to be usable on your device. Switches can help you control your device if it is difficult to interact with the touchscreen directly.

1. Touch **Switch Access**.

   The **Allow Switch Access to have full control of your device?** screen displays.
2. Touch **Allow**.
3. Choose a switch type by touching one of the following:
   - **USB switch** - A physically connected button via USB.
   - **Bluetooth switch** - A wireless button paired via Bluetooth.
   - **Camera switch** - Use facial gestures to control your device.

NOTE: Camera switch requires approximately 10 MB of additional data to be downloaded before use. A wireless connection is required. Go to Connecting to a Wi-Fi Network.

Configuring Timing Controls

Timing controls offer a variety of ways to adjust the timing of specific actions on your device.

1. To add a delay to touch and hold, touch **Touch & hold delay**. Choose from the following:
   - **Short**
   - **Medium**
   - **Long**

2. To choose how temporary messages that ask you take action are shown, touch **Time to take action (Accessibility timeout)**. Choose from the following:
   - **Default**
   - **10 seconds**
   - **30 seconds**
   - **1 minute**
   - **2 minutes**
3. To have a connected mouse automatically click when the cursor stops moving, touch **Autoclick (dwell timing)**. Choose from the following:
   - **Autoclick off**
   - **Short** - 0.2 seconds
   - **Medium** - 0.6 seconds
   - **Long** - 1 second
   - **Custom** - adjustable slider between 0.2 and 1 second

Configuring System Controls

This section describes how to adjust device-handling functions.

1. To configure navigation mode, touch **Navigation mode**. Choose one of the following:
   - **Gesture Navigation** - Back, Home, and switch apps are controlled with touchscreen gestures.
   - **3-button navigation** (default) - Back, Home, and switch apps are controlled with buttons at the bottom of the screen.
2. To enable one-handed mode, touch **One-handed mode** > **Use one-handed mode**.
3. To end calls with the power button, touch the **Power button ends call** toggle.
4. To have the device screen automatically rotate between landscape and portrait, touch the **Auto-rotate screen** toggle.

Configuring Vibration and Haptics

This section describes how to configure vibration and haptic settings to fine tune device feedback.

1. To enable, touch **Vibrations & haptics** > **Use vibration & haptics**.
2. Touch the toggles for the related settings where vibration and haptic is needed. The following settings are compatible:
   - **Ring vibration** - on by default
   - **Vibrate first then ring gradually** - off by default
   - **Notification vibration** - on by default
   - **Alarm vibration** - on by default
   - **Touch feedback** - on by default
   - **Media vibration** - on by default

Captions and Audio Settings

The captions and audio settings provide comprehensive control over the entire auditory experience by managing both sound output and its corresponding text-based transcripts.

Configuring Live Caption

Live Caption detects speech on your device and automatically generates captions.

1. To enable, touch **Live Caption** > **Use Live Caption**.
2. To change the language captions are shown in, touch **Languages**.
   a) Toggle on **Suggest detected languages** to have detected languages suggested for captions.
3. To adjust caption size and style, touch **Caption Preferences**.
   a) Touch **Caption size and style**.
   b) Touch **Text size**, options include:
      - **Very small**
      - **Small**
      - **Medium**
      - **Large** (default)
      - **Very large**
   c) Touch **Caption style**, options include:
      - **Set by app**
      - **White on black**
      - **Black on white** (default)
      - **Yellow on black**
      - **Yellow on blue**
      - **Custom**
   d) To see additional languages, touch **More options**.
4. To filter profanity from displaying in captions, touch the **Hide profanity** toggle.
5. To label certain sounds, like laughter, applause, and music touch the **Show sound labels** toggle.
6. To have live caption show up in volume controls, touch the **Live Caption in volume control** toggle.

Enabling Audio Description

Audio description allows an audible description of what's happening on screen in supported movies and shows to emit from the device.

To enable, touch the **Audio description** toggle.

Enabling Flash Notifications

Flash notifications allow for the camera light or screen to flash when you receive notifications or when an alarm sounds.

1. To enable camera flash, touch the **Camera flash** toggle.
2. To enable screen flash, touch the **Screen flash** toggle.
   a) To change the color of the screen when flashed, touch **Screen flash** and choose from a list of colors.
   b) Touch **Done**.
3. To preview the flash notifications, touch **Preview**.

Configuring Hearing Devices

Set up and manage ASHA and LE Audio hearing aids, cochlear implants, and other amplification devices.

1. To pair your hearing device, touch **Pair new device**.
2. To add a shortcut to access live captions and your hearing device, touch **Hearing device shortcut**.
3. To improve compatibility with telecoils and reduce unwanted noise, touch **Hearing aid compatibility**.
4. To find other hearing devices that are not supported by ASHA or LE Audio, touch **Pair new device** > **See more devices**.

Configuring Audio Adjustment

This section provides instructions for configuring audio adjustment settings.

1. To enable mono audio, tap **Mono audio**.
2. To adjust audio balance, move the slider for **Audio balance** to the left or right to add more volume to the left or right ear.

General Accessibility Options

The general accessibility options provide a collection of commonly needed accessibility features to ensure the device is usable by and inclusive of people with diverse abilities and needs.

Using Accessibility Shortcuts

Accessibility Shortcuts provide quick access to essential accessibility options.

1. To configure the accessibility button, touch **Accessibility button**.
   a) To set the button's location, touch **Location**, then touch one of the following:
      - **Floating over other apps**
      - **Navigation bar**
   b) To change the size of the button, touch **Size**, then touch one of the following:
      - **Small**
      - **Large**

c) To fade the button after a few seconds when not in use, touch the **Fade when not in use** toggle. Control the transparency of the fade with the slider.

2. To add a shortcut from the lock screen, touch **Shortcut from lock screen**.

   a) To use the shortcut, press and hold both **Volume Up** and **Volume Down** from the home screen.

Accessing Hearing Aids

The general accessibility menu section allows for quick connection to hearing aids.

To enable hearing aids from the general accessibility section, touch **Hearing aids** > **Hearing aids** (toggle).

Configuring Text-to-Speech Output

The general accessibility menu section allows for quick adjustments to the text-to-speech output.

1. Touch **Preferred engine** to change the preferred text-to-speech engine.

   The default preferred engine is Speech Recognition and Synthesis from Google.

2. To access Google TTS Options, touch ⚙.

   a) To install voice data in other languages, touch **Install voice data**.

   b) To download voices data using only Wi-Fi, touch the **Use Wi-Fi only** toggle.

   c) To make spoken text louder than normal so it comes in more clear than other audio that is also playing, touch **Amplify speech volume**.

   d) To change language detection, touch **Language detection** and choose from the following:

      - **Off**
      - **Conservative** (default)
      - **Aggressive**

   e) To turn on anonymous usage reports, touch **Anonymous usage reports** > **On**.

NOTE: When this feature is turned on, Google collects anonymous usage reports.
Examples of metrics that Google collects:

- How often text-to-speech is used.
- The performance of text-to-speech requests.
- Which languages are used.
- How often text-to-speech fails to deliver speech output.

   f) To provide feedback to Google, touch **Feedback**.

   g) To view Open Source Licenses, touch **Open Source Licenses**.

3. Touch **Language** to change the language of text-to-speech.

   The default language is the system language.

4. Use the **Speech rate** slider to change the rate of speech speed.

5. Use the **Pitch** slider to change the pitch of the speech

Setting Wake-Up Sources

By default, the device wakes from Sleep mode when the user presses **Power**. The device can be configured to wake when the user presses **PTT** or **Scan** on the left side of the device handle.

1. Go to **Settings**.
2. Touch **Wake-Up Sources**.
   - **GUN_TRIGGER** - Optional Trigger Handle scan button.
   - **LEFT_TRIGGER_2** - PTT button.
   - **RIGHT_TRIGGER_1** - Right scan button.
   - **SCAN** - Left scan button.
3. Touch a checkbox.

   A check displays in the checkbox.
4. Touch the Home button.

Remapping a Button

Buttons on the device can be programmed to perform different functions or as shortcuts to installed apps. For a list of key names and descriptions, go to techdocs.zebra.com/keymappingmgr/.

NOTE: Zebra does not recommend remapping the scan button.

1. Go to **Settings**.
2. Touch **Key Programmer**. A list of programmable buttons displays.
3. Select the button to remap.

Remappable Buttons

List of remappable device buttons.

Figure 9 Button Positions

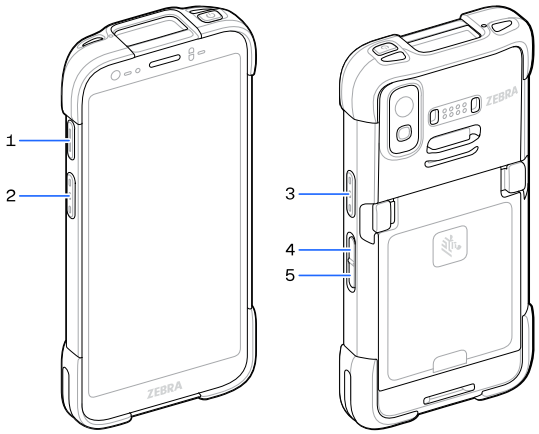

1	LEFT_TRIGGER_2	PTT button
2	SCAN	Left scan button
3	RIGHT_TRIGGER_1	Right scan button
4	VOLUMEUP	Volume up button
5	VOLUMEDOWN	Volume down button

Alert Button

Configure any remappable key on the device as an Alert button using StageNow.

Use an Alert button to launch an app and a command, or call a specified phone number.

Configure the Alert Button

This section provides basic configuration. For detailed information on configuring the Alert button, go to zebra.techdocs.com/stagenow.

Configure the Alert button through StageNow, using the following Configuration Service Providers (CSPs).

- PowerMgr - Set All Wake-Up Sources to Turn on. This wakes the device if it is in Sleep mode.
- Intent - Create a new setting:
  - Mode - Set to Schedule sending of Intent on key presses.
  - Keep Device Awake - Enable this option to keep the device awake after the short key press.

  - Key Identifier - Select a remappable key. For example, Rear Button.
  - Android Action Name - Enter the action name. For example, to initiate a call, enter android.intent.action.CALL.
  - URI - Enter the URI. For example, to call a phone number, enter tel:123456789.
- KeyMappingMgr - Modify the default behavior of the button. It is recommended to set this to **None**. Otherwise, the button performs its default behavior and sends out an alert.

Alert Accessibility Service

After you configure the Alert button using StageNow, the Alert Accessibility Service becomes available on the device.

Go to **Settings** > **Accessibility** > **Alert Accessibility service** to enable or disable the alert button. The device automatically enables the Alert Accessibility Service when it reboots.

Using an Alert Button

Activate the Alert button using a long-press of at least one second to prevent accidental alerts.

- If the device is in Sleep mode, perform a short-press on the Alert button, followed by a long-press.
- If the device is awake, perform a long-press on the Alert button.

Keyboards

The device provides multiple keyboard options.

NOTE: By default, the Enterprise and Virtual Keyboards are disabled. The Enterprise Keyboard is available for download from the Zebra Support Site.

- Gboard
- Physical Keyboard
- Enterprise Keyboard - Not pre-installed on the device. Contact Zebra Support for more information.

Keyboard Configuration

This section describes configuring the device's keyboard.

Enabling Keyboards

This section describes how to enable keyboards.

1. Go to **Settings**.
2. Touch **System** > **Keyboard** > **On-screen keyboard**.
3. Touch a keyboard to enable.

Switching Between Keyboards

When multiple keyboards are enabled, you can switch between them to access different settings and characters.

NOTE: By default, the Gboard is enabled. All other virtual keyboards are disabled.

1. Touch a text box to display the current keyboard.
2. Touch the keyboard icon in the lower-left corner of the screen.
3. Select a keyboard from the **Choose input method** dialog.

Using the Keyboards

Using the keyboards to enter text in a text field.

- To configure the keyboard settings, touch and hold "," (comma) and then select **Android keyboard settings**.

Edit Text

Edit entered text and use menu commands to cut, copy, and paste text within or across apps. Some apps do not support editing some or all of the text they display; others may offer their own way to select text.

Entering Numbers, Symbols, and Special Characters

This section describes how to input numbers, symbols, and special characters using the keyboard.

1. Enter numbers and symbols.
   - Touch and hold one of the top-row keys until a menu displays then select a number or special character.
   - Touch the Shift key once for a single capital letter. Touch the Shift key twice to lock in uppercase. Touch the Shift key a third time to unlock Capslock.
   - Touch **?123** to switch to the numbers and symbols keyboard.
   - Touch the **=\<** key on the numbers and symbols keyboard to view additional symbols.
2. Enter special characters.
   - Touch and hold a number or symbol key to open a menu of additional symbols. A larger version of the key displays briefly over the keyboard.

Enterprise Keyboard

The Enterprise Keyboard contains multiple keyboard types.

NOTE: Only available with Mobility DNA Enterprise License.

- Numeric
- Alpha
- Special characters

- Data capture

Numeric Tab

The numeric keyboard is labeled **123**. The keys displayed vary on the app being used. For example, an arrow displays in **Contacts**, however **Done** displays in **Email** account setup.

Alpha Tab

The alpha keyboard is labeled using the language code. For English, the alpha keyboard is labeled **EN**.

Additional Character Tab

The additional characters keyboard is labeled **#*/**.

- Touch ☺ to enter emoji icons in a text message.
- Touch **ABC** to return to the Symbols keyboard.

Scan Tab

The Scan tab provides an easy data capture feature for scanning barcodes.

Language Usage

Use the **Language & input** settings to change the device's language, including words added to the dictionary.

Changing the Language Setting

This section describes how to change the language setting.

1. Go to **Settings**.
2. Touch **System** > **Languages**.
3. Touch **System Languages**.

   A list of available languages displays.
4. If the desired language is not listed, touch **Add a language** and select a language from the list.
5. Touch and hold the ☰ icon that is located to the right of the newly added language, then drag it to the top of the list.

   The operating system text changes to the selected language.

Adding Words to the Dictionary

This section describes how to add words to the device's dictionary.

1. Go to **Settings**.
2. Touch **System** > **Keyboard** > **Personal dictionary**.
3. If prompted, select the language where this word or phrase is stored.

4. Touch **+** to add a new word or phrase to the dictionary.
5. Enter the word or phrase.
6. In the **Shortcut** text box, enter a shortcut for the word or phrase.

Notifications

Device notification settings allow you to configure how notifications occur on the device, and app notification settings allow you to configure how notifications for a specific app occur.

To view device notification settings, touch **Settings** > **Notifications**.

To view app notifications, touch **Settings** > **Notifications** > **App notifications**, and then select an app.

Setting App Notifications

Manage how notifications behave for a single, specific application, including turning them on or off entirely.

1. Go to **Settings** > **Notifications** > **App notifications**.
2. From here, do one of the following:
   - Touch the toggle to switch the application's notifications completely off.
   - Touch the name of the application you want to configure.
3. If the application has configurable notifications, toggle the desired notifications from the **Other** category.

Viewing Notifications

View a list of all applications and their current notification status.

1. Go to **Settings** > **Notifications** > **App notifications**.
2. Scroll through the list to view all apps.

Controlling Lock Screen Notifications

Control what level of notification detail can be seen when the device is locked.

1. Go to **Settings** > **Notifications** > **Notifications on lock screen**.
2. Select one of the following options:
   - **Show conversations, default, and silent** - Shows all notifications on the lock screen (default).
   - **Hide silent conversations and notifications** - Hides notifications that are marked as silent.
   - **Don't show any notifications** - Prevents all notifications from displaying on the lock screen.
3. Additionally, use the **Sensitive notifications** toggle to prevent content from potentially sensitive notifications (like messages) from being shown on the lock screen when it's locked.

Enabling Blink Light

The Notification LED lights are blue when an app, such as email and VoIP, generates a programmable notification or to indicate when the device is connected to a Bluetooth device. By default, LED notifications are enabled.

1. Go to **Settings**.
2. Touch **Notifications**.
3. Touch **Blink light** to toggle the notification on or off.

Applications

The APPS screen displays icons for all installed apps. See Application Deployment for information on installing and uninstalling apps. For information on standard Android apps, go to the Google Play Apps store.

Installed Applications

Aside from the common Google apps, the Zebra-specific apps that are installed on the device are described in this section.

Table 10 Apps

Item	Description
	Battery Manager - Displays battery information, including charge level, status, health and wear level, and use to place device in Battery Swap mode when replacing the battery.
	Bluetooth Pairing Utility - Use to pair a Zebra Bluetooth scanner with the device by scanning a barcode.
	DataWedge - Enables data capture using the imager.
	DisplayLink Presenter - Use to present the device screen onto a connected monitor.
	DWDemo - Provides a way to demonstrate the data capture features using the imager.
	License Manager - Use to manage software licenses on the device.
	RxLogger - Use to diagnose device and app issues.

Table 10 Apps (Continued)

Item	Description
	StageNow - Allows the device to stage a device for initial use by initiating the deployment of settings, firmware, and software.
	VoD - The Video on Device basic app provides a how-to video for proper device cleaning. For Video on Device licensing information, go to learning.zebra.com.
	Wireless Analyzer - A diagnostic intelligent app. Use to diagnose surrounding area and display network stats, such as coverage hole detection, or AP in the vicinity. Refer to the *Wireless Analyzer Administrator Guide for Android*. Only available with Mobility DNA Enterprise License.
	Zebra Bluetooth Settings - Use to configure Bluetooth logging.
	Zebra Data Services - Use to enable or disable Zebra Data Services. Some options are set by the system administrator.
	Zebra Showcase - Provides a way to experience and learn about Zebra's new or existing capabilities.

Accessing Apps

Access all apps installed on the device using the APPS window.

1. On the Home screen, swipe up from the bottom of the screen.
2. Slide the **APPS** window up or down to view more app icons.
3. Touch an icon to open the app.

Switching Between Recent Apps

Use the Recents screen to view and switch between recently used applications.

1. Touch ■ or swipe up from the bottom of the screen and hold if using gesture navigation.

   A horizontal carousel of recently used app windows displays.
2. Swipe left and right to scroll through the list of recent apps.
3. To open an app, tap on its preview window.
4. To close an app and remove it from the list, swipe its preview window up.
5. To close all apps, swipe all the way to the end of the list and tap **Clear all**.

Battery Manager

The Battery Manager provides detailed information about the battery.

This section also provides battery swap procedures for supported devices.

Opening Battery Manager

This section describes the method for opening the Battery Manager app.

- To open the Battery Manager app, swipe up from the bottom of the Home screen, and then touch .

Battery Manager Information

The Battery Manager displays detailed information about battery charging, health, and status.

Table 11 Battery Icons

Battery Icon	Description
	Battery charge level is between 85% and 100%.
	Battery charge level is between 19% and 84%.
	Battery charge level is between 0% and 18%.

- **Level** - The current battery charge level as a percentage. Displays -% when the level is unknown.
- **Wear** - The health of the battery in graphical form. When the wear level exceeds 80%, the bar color changes to red.
- **Health** - The health of the battery. If a critical error occurs, displays. Touch to view the error description.
  - **Decommission** - The battery is past its useful life and should be replaced. See system administrator.
  - **Good** - The battery is good.
  - **Charge error** - An error occurred while charging. See system administrator.
  - **Over Current** - An over-current condition occurred. See system administrator.
  - **Dead** - The battery has no charge. Replace the battery.
  - **Over Voltage** - An over-voltage condition occurred. See system administrator.
  - **Below Temperature** - The battery temperature is below the operating temperature. See system administrator.
  - **Failure Detected** - A failure has been detected in the battery. See system administrator.
  - **Unknown** - See system administrator.
- **Charge Status**
  - **Not charging** - The device is not connected to AC power.

    - **Not charging** - The device is not charging.
    - **Charging-AC** - The device is connected to AC power and charging or is fast charging via USB.
    - **Charging-USB** - The device is connected to a host computer with a USB cable and charging.
    - **Discharging** - The battery is discharging.
    - **Full** - The battery is fully charged.
    - **Unknown** - The battery status is unknown.
- **Time until Full** - The amount of time until the battery is fully charged.
- **Time since charging** - The amount of time since the device began charging.
- **Time until empty** - The amount of time until the battery is empty.
- Advanced info - Additional battery information.
    - **Battery present status** - Indicates that the battery is present.
    - **Battery level** - The battery charge level as a percentage of scale.
    - **Battery scale** - The battery scale level used to determine battery level (100).
    - **Scaled Battery Level** - The charge level as a percentage of full capacity.
    - **ZCM Status** - The current status of the Zero Current Mode, power-saving mode.
    - **Battery voltage** - The current battery voltage in millivolts.
    - **Battery temperature** - The current battery temperature in degrees Centigrade.
    - **Battery technology** - The type of battery.
    - **Battery current** - The average current into or out of the battery over the last second in mAh.
    - **Battery manufacture date** - The date of manufacture.
    - **Battery serial number** - The battery serial number. The number matches the serial number printed on the battery label.
    - **Battery part number** - The battery part number.
    - **Battery decommission status** - Indicates if the battery is past its life span.
        - **Battery Good** - The battery is in good health.
        - **Decommissioned Battery** - The battery is past its useful life and should be replaced.
    - **Base cumulative charge** - Cumulative charge using Zebra charging equipment only.
    - **Battery present capacity** - Maximum amount of charge that could be pulled from the battery under the present discharge conditions if the battery were fully charged.
    - **Battery health percentage** - With a range from 0 to 100, this is the ratio of “present_capacity” to “design_capacity” at a discharge rate of “design_capacity”.
    - **% decommission threshold** - The default % decommission threshold for a gifted battery as 80%.
    - **Battery present charge** - Amount of usable charge remaining in the battery at present under the current discharge conditions.
    - **Battery total cumulative charge** - The total accumulated charge in all chargers.
    - **Battery time since first use** - The time passed since the battery was placed in a Zebra terminal for the first time.

- **Battery error status** - The error status of the battery.
- **App version** - The application version number.

Battery Manager Swap Tab

Use to place the device in Battery Swap mode when replacing the battery. Follow the instructions on the screen. Touch **I understand. Proceed with swap** button.

NOTE: The Swap tab also displays when the user presses the Power button and selects Battery Swap.

Camera

This section provides information for taking photos and recording videos using the integrated digital cameras.

NOTE: The device saves photos and videos on the microSD card, if installed and the storage path is changed manually. By default, or if a microSD card is not installed, the device saves photos and videos on internal storage.

Taking Photos

NOTE: See Camera Settings for camera settings descriptions.

1. Swipe up from the bottom of the Home screen and touch **Camera** to access the Camera application. Photo mode is the standard mode that displays.

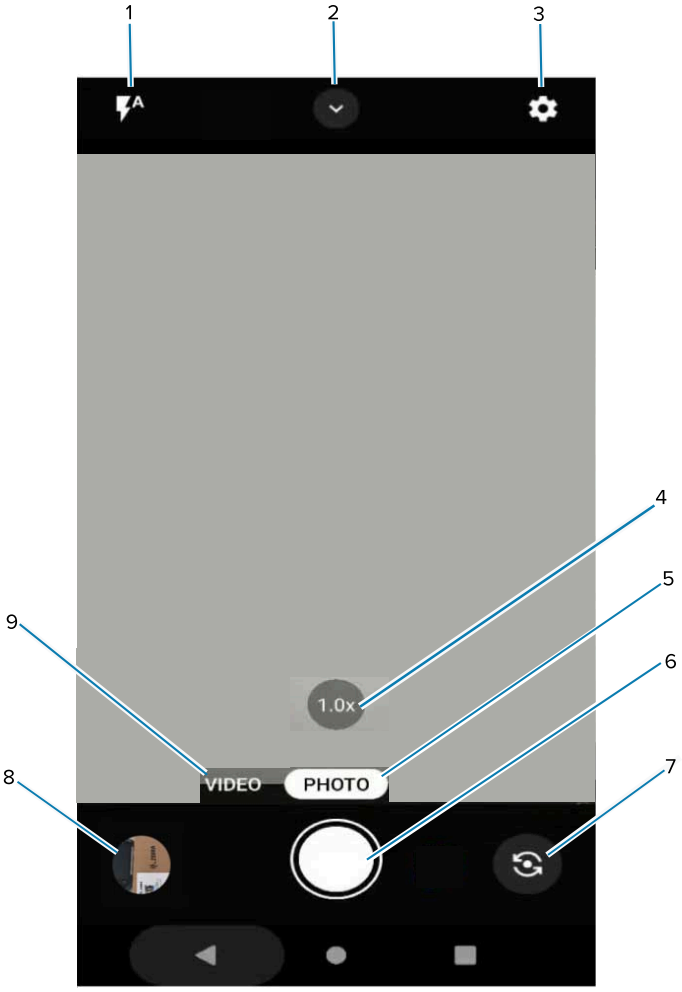

1	Flash
2	Camera Quick Settings
3	Camera App Settings
4	Zoom
5	Photo mode
6	Shutter button
7	Rear/front cameras
8	Thumbnail
9	Video mode

2. To switch between the rear camera and front camera (if available), touch .
3. Frame the subject on the screen.

4. Touch an area on the screen to focus. The yellow focus box displays and places that area into focus. Alternatively, the AutoFocus Animation can be enabled in the Settings menu and the yellow focus box automatically displays when in focus.
5. To turn the Flash on, touch the icon which can also be accessed via the Quick Settings Menu.
6. To zoom in or out, the following options are available:
   - Tap the **1.0x** zoom button to toggle between **1.0x** and **2.0x**.
   - Press and hold the **1.0x** zoom icon until the zoom slider displays. Slide the slider to the desired zoom.
   - Touch and hold an area with two fingers, then spread them apart to zoom in or pinch them together to zoom out.
7. Touch to take a photo. A shutter sound emits.

The last photo displays as a thumbnail in the lower-left corner.

Recording Videos

This section describes how to record videos using the device.

1. Swipe up from the bottom of the Home screen and touch to launch the Camera application.
2. Touch **Video** to access Video mode.

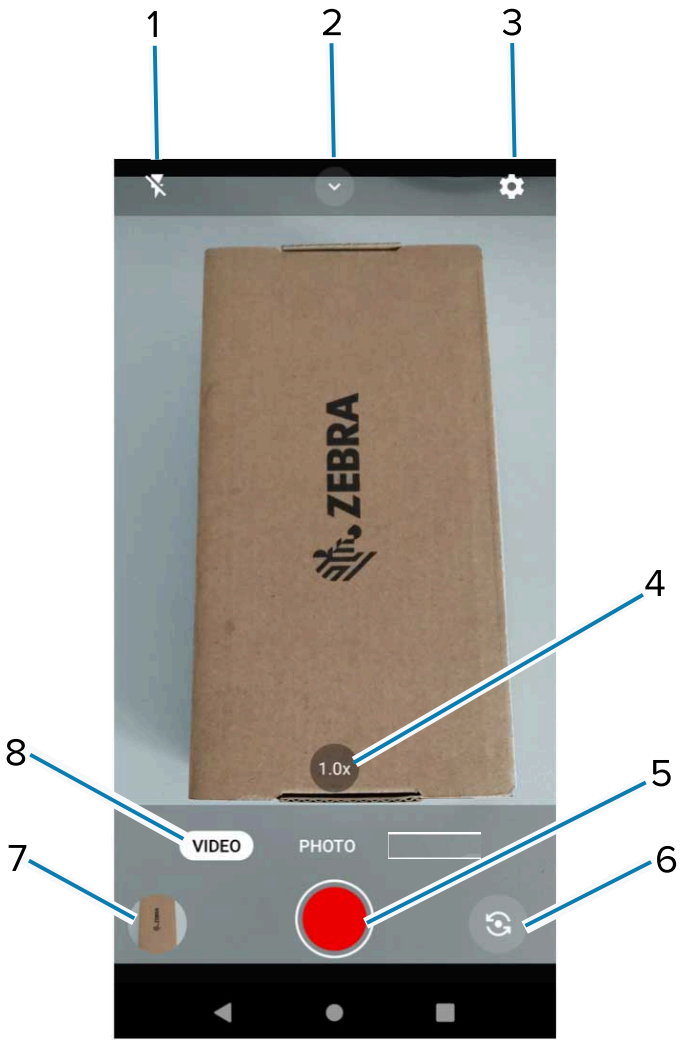

1	Flash
2	Video Quick Settings
3	Camera App Settings
4	Zoom
5	Start/stop recording button
6	Rear/front cameras
7	Thumbnail
8	Video mode

3. To switch between the rear camera and front camera (if available), touch .
4. Point the camera and frame the scene.
5. Touch an area on the screen to focus. The yellow focus box displays and places that area into focus. Alternatively, the AutoFocus Animation can be enabled in the Settings menu and the yellow focus box automatically displays when in focus.

6. To turn the Flash on, touch the icon which can also be accessed via the Quick Settings Menu.
7. Tap the **1.0x** zoom button to toggle between **1.0x** and **2.0x** or press and hold the **1.0x** zoom icon until the zoom slider displays and slide the slider to the desired zoom.
8. Touch the **Record** button. The video timer displays at the top of the screen.

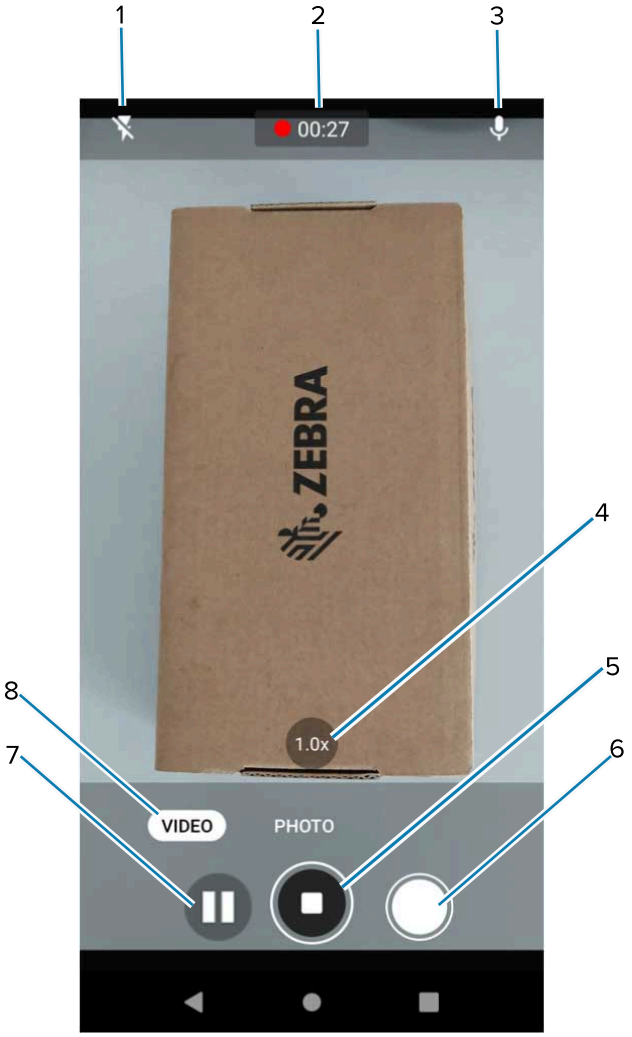

1	Flash
2	Video timer
3	Audio
4	Zoom
5	Start/stop recording button
6	Still image capture button (during video recording)
7	Pause recording button
8	Video mode

9. Touch the **Record** button to end the recording.

Quick Camera Photo Mode and Video Mode Settings

Access common settings directly from the main photo or video screen for quick adjustments.

When you are in Photo mode, several quick setting icons are available on the screen:

- **Flash** - Touch this icon to cycle through flash options:
  - **Auto** - The camera decides if a flash is needed.
  - **On** - The flash will always trigger.
  - **Off** - The flash will never trigger.
- **Timer** - Select Off (default), 3 seconds, or 10 seconds.
- **Aspect Ratio** - The size (in pixels) of the photo: 12.5M (default), 8M, 5M, 720p, WVGA, VGA, QVGA, 50M.
- **More Settings / Pro Mode** - Advanced settings like Image Quality Analyzer, Multi-frame noise reduction (MFNR), and AutoFocus Animation.
- **Face Retouching** - Identify faces in a captured photo and automatically blur them, and turn face detection On or Off.

When you switch to Video mode, the following quick settings are typically available:

- **Flash (Video Light)** - Touch this icon to turn the camera LED on or off to act as a continuous light source for your video.
- **Resolution** - Set video quality to: 4k UHD (rear camera only), HD 1080p (default), HD 720p, SD 480p, VGA, CIF, or QVGA.
- **Audio** - Set the audio encoder to: AMRNB, or AAC (default).
- **White Balance** - Provides the ability to change the white balance to Auto, Incandescent, or Fluorescent.

Camera Settings

In the Camera app, camera settings display on the screen. Touch ⚙ to display the camera setting options.

- **General** - These settings apply to both the still camera and video camera.
  - **Camera Sounds** - Select to play a shutter sound when taking a photo. Options: Disable or Enable (default).
  - **Haptic Feedback** - Provides tactile responses when interacting with the camera.
  - **Location Tags** - Includes location information when pictures and videos are taken.
  - **Storage** - Set the location to store the photo to: Phone or SD Card.
  - **Dirty Lens Detection** - Notifies when the camera lens might be dirty. Options: Disable (default) or Enable.
  - **QR Code Mode** - Enable to scan QR Codes with the option to launch URL. Options: Disable (default) or Enable.
  - **Google Lens** - Select to enable Google-developed recognition technology that brings up relevant information related to identified objects within an image.
  - **Digital Level** - Display a level line to ensure the photo or video is level. Options: Disable (default) or Enable.
  - **Face Detection** - Select to turn the face detection On (default) or Off.

    - **Gestures** - View gestures and power user controls. Gestures include: Swipe Down, Swipe Up, Side Swipe, Tap, Tap + Hold, Double Tap, and Hold Zoom.
- **Still Camera** - These settings apply only to the still camera.
    - **Photo Grid** - Displays a 3 x 3 grid guide on the camera viewport. Options: Disabled (default), or Enable.
    - **Countdown timer** - Select Off (default), 3 seconds, or 10 seconds.
    - **Picture size** - The size (in pixels) of the photo: 12.5M (default), 8M, 5M, 720p, WVGA, VGA, QVGA, 50M.
    - **Picture quality** - Set the picture quality setting to: Low, Standard (default), or High.
    - **Image Quality Analyzer** - Analyze the image quality for it's degree of sharpness.
    - **Privacy Blur - Face Blur** - Identify faces in a captured photo and automatically blur them.
    - **Picture Format** - All still images are saved in JPEG format.
    - **MFNR** - Sets multi-frame noise reduction to improve quality in low light conditions. Options: Enabled (default), or Disabled.
    - **AutoFocus Animation** - Select to enable or disable the camera focus ring in the camera preview. Options: Disable (default) or Enable.
- **Video Camera** - These settings apply only to the video camera.
    - **Video quality** - Set video quality to: 4k UHD (rear camera only), HD 1080p (default), HD 720p, SD 480p, VGA, CIF, or QVGA.
    - **Video duration** - Set to: 30 seconds (MMS), 10 minutes (default), 30 minutes, or no limit.
    - **Noise Reduction** - Off, Fast, or High Quality (default).
    - **HEVC Encoder** - Save video recordings using high-efficiency video codec (HEVC/h265) for smaller file size. Options: Disabled (default), or Enable.
    - **Audio Encoder** - Set the audio encoder to: AMRNB, or AAC (default).
    - **Video Rotation** - Set the rotation of the video to: 0 (default), 90, 180, or 270.
- **System**
    - **Restore defaults** - Select to restore all settings to the default values.
    - **About** - Displays the software version of the camera app.

DWDemo

Use DataWedge Demonstration (DWDemo) to demonstrate data capture functionality. To configure DataWedge, go to techdocs.zebra.com/dwdemo/.

NOTE: DataWedge is disabled on the Home screen. To enable this feature, go to the **DataWedge** settings and enable **Barcode input** option.

DWDemo Icons

This table lists the icons available on the DWDemo app.

Table 12 DataWedge Demonstration Icons

Category	Icon	Description
Illumination		Imager illumination is on. Touch to turn illumination off.
Illumination		Imager illumination is off. Touch to turn illumination on.
Data capture		The data capture function is through the internal imager.
Data capture		The data capture function is through the rear camera.
Data capture		A Bluetooth scanner is connected.
Data capture		A Bluetooth scanner is not connected.
Scan mode		Imager is in picklist mode. Touch to change to normal scan mode.
Scan mode		Imager is in normal scan mode. Touch to change to picklist mode.
Menu		Opens a menu to view the application information or to set the application DataWedge profile.

Selecting a Scanner

Go to the Data Capture section for more information.

1. To select a scanner, touch ⋮ > **Settings** > **Scanner Selection**.
2. Press the programmable button or touch the yellow scan button to capture data.

   The data displays in the text field below the yellow button.

RxLogger

RxLogger is a comprehensive diagnostic tool that provides application and system metrics, and diagnoses device and application issues.

RxLogger logs the following information: CPU load, memory load, memory snapshots, battery consumption, power states, wireless logging, cellular logging, TCP dumps, Bluetooth logging, GPS logging, logcat, FTP push/pull, ANR dumps, and so on. All generated logs and files are saved onto flash storage on the device (internal or external).

RxLogger Configuration

RxLogger is built with an extensible plug-in architecture and comes packaged with a number of plug-ins already built-in. For information on configuring RxLogger, go to techdocs.zebra.com/rxlogger/.

To open the configuration screen, from the RxLogger home screen, touch **Settings**.

Configuration File

All RxLogger settings are stored in a file on the device, permitting remote configuration and mass deployment of setting files using an enterprise mobile management (EMM) system.

IMPORTANT: The RxLogger configuration file is human-readable; however, it should not be edited by hand as doing so can lead to unpredictable behavior. Zebra recommends modifying RxLogger settings only through the RxLogger UI.

- File name: `config.json`
- Location: `/<internal_storage>/RxLogger`
- With external SD Card: `/storage/sdcard1/RxLogger`
- With no external SD Card: `/storage/sdcard0/RxLogger` When a new settings file is pushed to the device, RxLogger restarts all affected modules and applies the new settings immediately.

Copy the file from the device to a host computer using a USB connection. Edit the configuration file through the RxLogger UI and then replace the JSON file on the device. There is no need to stop and restart the RxLogger service because the file change is automatically detected.

Enabling Logging

This section describes the method for enabling logging.

1. Swipe the screen up and select .
2. Touch **Start**.

Disabling Logging

This section describes the method for disabling logging.

1. Swipe the screen up and select .
2. Touch **Stop**.

Extracting Log Files

This section describes the method for extracting log files.

1. Connect the device to a host computer using a USB connection.
2. Using a file explorer, navigate to the RxLogger folder.
3. Copy the file from the device to the host computer.
4. Disconnect the device from the host computer.

Backing Up Data

RxLogger Utility allows the user to make a zip file of the RxLogger folder in the device, which by default contains all the RxLogger logs stored in the device.

- To save the backup data, touch ⋮ > **BackupNow**.

RxLogger Utility

RxLogger Utility is a data monitoring application for viewing logs in the device while RxLogger is running. Logs and RxLogger Utility features are accessed using Main Chat Head.

Initiating the Main Chat Head

This section describes the method for initiating the main chat head.

1. Open **RxLogger**.
2. Touch ⋮ > **Toggle Chat Head**.

   The Main Chat Head icon displays on the screen.
3. Touch and drag the Main Chat Head icon to move it around the screen.

Removing the Main Chat Head

This section describes the method for removing the main chat head.

1. Touch and drag the icon.

   A circle with an X displays.
2. Move the icon over the circle and then release.

Viewing Logs

1. Touch the Main Chat Head icon.

   The RxLogger Utility screen displays.
2. Touch a log to open it.

   Open many logs with each displaying a new Sub Chat Head.
3. If necessary, scroll left or right to view additional Sub Chat Head icons.
4. Touch a Sub Chat Head to display the log contents.

Removing a Sub Chat Head Icon

This section describes the method for removing the sub chat chat head.

- To remove a Sub Chat Head icon, press and hold the icon until it disappears.

Backing Up In Overlay View

RxLogger Utility allows the user to make a zip file of the RxLogger folder in the device, which by default contains all the RxLogger logs stored in the device.

The Backup icon is always available in Overlay View.

1. Touch .

   The Backup dialog box displays.

2. Touch **Yes** to create the backup.

Zebra Showcase App

The Zebra Showcase App is designed for any user to easily learn, explore, test, and demo key features and capabilities of Zebra Android devices. The Showcase App provides the opportunity to experience Zebra's cutting-edge data capture and AI capabilities.

Data Capture demos range from simple/multi-barcode scanning to OCR and image capture, as well as product recognition. All demos are tutorial-based, offering users an easy way to immediately learn and explore the diverse features with minimal effort. The Showcase App is built on Zebra's Enterprise Browser, which enables quick, easy updates to the app and its demos. The Showcase App works offline, but an internet connection is required for the initial download.

Installing the Zebra Showcase App

This section describes the method for installing the Zebra Showcase App on your device.

The app launcher for the Zebra Showcase App is preinstalled on all supported Zebra Android devices.

1. Connect the device to the internet.
2. From the home screen, tap .
3. Tap **Download** to initiate the installation process.
4. In the End User License Agreement (EULA) screen, tap **Agree**.

   Once the app is downloaded and installed, it automatically closes, and the device returns to the home screen.

When launching the Showcase App for the first time, a tutorial displays providing an overview of how to use the app. Either follow the tutorial or tap **Close** to proceed to the main app interface.

NOTE: A predefined DataWedge profile named "Zebra Showcase" is dedicated for use with the Zebra Showcase App.

NOTE: After the download, all demos can be experienced offline without an internet connection.

Available Demos

This section provides a reference for the available demos within the Zebra Showcase App and their functions.

Table 13 AI Suite Data Capture SDK

	AI Barcode Finder	Identify actions mapped to specific barcodes
	AI Data Capture Demo	Capture barcode, text, identify shelves, price tags and products

Table 14 Scanning

	Any Barcode	Capture 1D and 2D barcodes
	Picklist Mode	Selective barcode capture
	UDI Barcodes	Capture and parse healthcare barcodes

Table 15 MultiBarcode

	Variable or Fixed Quantity	Capture up to 100 barcodes in a single trigger press
	Auto Group ID	Identify and capture a group of common barcodes, such as multiple serial numbers
	Meter Reading OCR Wedge	Automatically read analog, digital and dial meters

Table 16 OCR

	Picklist + OCR	Point and capture barcode or text.

Table 16 OCR (Continued)

	Free-Form OCR	Extract printed text from labels, documents and more
	TIN OCR Wedge	Capture Tire Identification Numbers molded into tire sidewalls
	License Plate OCR Wedge	Capture US and EU vehicle license plates
	VIN OCR Wedge	Capture Vehicle Identification Numbers from paper and windshields
	ID OCR Wedge	Capture driver's licenses and identification cards
	OCR-B Travel Documents	Scan travel documents such as passports and visas
	Meter Reading OCR Wedge	Automatically read analog, digital and dial meters
	Container ID OCR Wedge	Capture ID numbers from shipping containers

Table 17 Image

	Free-Form Image Capture	Image/barcode(s) capture via integrated imager or camera
	Document Capture	Easily capture cropped images of documents

Free-Form OCR

Free-Form OCR enables the ability to process documents or labels quickly and capture data with higher accuracy. Free-Form OCR automatically captures data by recognizing text in an image and extracting it as digital text. During capture, the Region of Interest (ROI) frame is visible in the preview screen, allowing the user to adjust it to enclose the target text before data capture.

Free-Form OCR segments capture text into 3 components:

- **Block** - a contiguous set of text lines, such as a paragraph or column
- **Line** - a contiguous set of words on the same axis or line, such as a line of text
- **Element** - a contiguous set of alphanumeric characters ("word") on the same axis in most

The image resolution is 1920 x 1080 for images captured from the camera.

Go to *Extract string data from the intent* in the Workflow Input Programmer's Guide for more information.

Free-Form OCR Configurations

This section describes the configurations available within Free-Form OCR.

- **Input Source** - Specifies the input source for data capture: **Imager** or **Camera**.
- **Session Timeout** - Specifies the timeout period in milliseconds. The value can range from 0 – 60000, in increments of 500. The default is 15000.
- **Script** - Specifies the script language of the text being read. Supported languages include Chinese, Japanese, Korean, Devanagari, and various Latin-based languages.
  - **Latin** (default)
  - **Latin and Chinese**
  - **Latin and Japanese**
  - **Latin and Korean**
  - **Latin and Devanagari**
- **Illumination** - Enables or disables illumination during the scanning session.
- **Output Image** - Specifies the output mode for the captured image:
  - **Disable** - No image is output.
  - **Full** - Outputs the entire image.
  - **Cropped** (default) - Outputs an image cropped to the Region of Interest (ROI). The user adjusts and sets the ROI in the preview screen during data capture.
- **Zoom** - Specifies the camera zoom level, from 1 to 8. The default value is 1.
- **Report OCR Data Rules** - Allows for the creation of Regular Expression (Regex) rules to validate OCR data. Note that Regex is applied at the block level.
- **Feedback Parameters**:
  - **Decode Audio Feedback** - Selects an audio tone from the list to play upon a successful decode.
  - **Decode Haptic Feedback** - Enables or disables device vibration upon a successful decode.
  - **Decode LED Notification** - When enabled, the green LED flashes to indicate a successful decode.
  - **Beep Volume Channel** - Selects the volume channel to use for the decode audio feedback:
    - **Ringer** - Uses the Ringer volume setting.
    - **Music and Media** - Uses the Music and Media volume setting.
    - **Alarms** - Uses the Alarms volume setting.
    - **Notification** - Uses the Notification volume setting (default).

- **Region of Interest (ROI) Size** - Configures the default size of the ROI bounding box:
  - **Width - % of Screen** - Sets the width of the ROI bounding box as a percentage of the screen. The default is 40.
  - **Height - % of Screen** - Sets the height of the ROI bounding box as a percentage of the screen. The default is 10.
- **Auto-Remember Resize** - When enabled, the ROI retains its manually resized dimensions across sessions. By default, this is disabled, and the ROI reverts to its default size at the start of each session.

Picklist + OCR

Picklist + OCR enables the capture of barcodes and digitization of printed text from images, allowing seamless processing within a single workflow and eliminating the need to switch between functionalities. Data is captured using either the camera or the imager. Picklist + OCR supports recognizing words or lines of text, with optional, customizable OCR rules for constraints and confidence levels.

NOTE:

If using Keystroke Output to output data scanned from Picklist + OCR, Zebra recommends sending a pause (approximately 200 ms) using Advanced Data Formatting rules before sending the scanned data.

Go to techdocs.zebra.com/datawedge/latest/guide/output/keystroke/ for information on Keystroke Output.

Go to techdocs.zebra.com/datawedge/latest/guide/process/adf/ for information on Advanced Data Formatting.

Picklist + OCR Configurations

This section describes the varying configurations within Picklist + OCR.

- **Input Source** - Specify the input source to capture data: Imager or Camera. Default: Imager
- **Session Timeout** - Specify the timeout period.
  - Integer range: 0 – 60000 (increments of 500)
  - Default: 15000
- **Illumination** - Turn on/off illumination during the scanning session. Default values are “on” for Imager and “off” for Camera.
- **Script** - Specify the script:
  - Latin (default)
  - Latin and Chinese
  - Latin and Japanese
  - Latin and Korean
  - Latin and Devanagari

- **Report OCR Data Rules** - Specify the conditions and actions to decode the selected text. Available options:
  - **Conditions** - Define the Regex or Identifiers in which the rule should be applied:
    - **RegEx**: Add the Regex Syntax. Keep in mind that RegEx is applied differently based on the Text Structure selection. Regex is applied at the Line level if "Single Line" is selected and at the word level if "Single Word" is selected.
    - **Identifier**:
      - **Min Length** - Specify the minimum length of the text to be returned.
      - **Max Length** - Specify the maximum length of the text to be returned.
      - **Starts With** - The text must begin with the specified characters.
      - **Contains** - The text must contain the specified characters.
      - **Ignore Case Sensitivity** - If enabled, the captured text is not case-sensitive. If disabled, the captured text is case-sensitive and must match the letter case in the Contains field.
  - **Actions** - Define the action to take when the condition is met:
    - **Report** - Return the captured text based on the Conditions specified.
- **Report Barcode Data Rules** - Specify the conditions and actions to decode the barcode. Available options:
  - **Conditions** - Define the conditions in which the rule should be applied:
    - **Identifier**:
      - **Min Length** - Specify the minimum length of the barcode to be returned.
      - **Max Length** - Specify the maximum length of the barcode to be returned.
      - **Starts With** - Specify the characters with which the barcode must begin.
      - **Contains** - The barcode must contain the specified characters.
      - **Ignore Case Sensitivity** - If enabled, the captured barcode is not case-sensitive. If disabled, the captured word is case-sensitive and must match the letter case in the Contains field.
  - **Actions** - Define the action to take when the condition is met:
    - **Report** - Return the captured barcode based on the Conditions specified.
- **Picklist Mode** - Select the data type to be scanned in picklist mode:
  - OCR or Barcode (default)
  - OCR Only
  - Barcode Only
- **Text Structure** - Select the data structure of the text.
  - Single Word
  - Single Line (default)
- **Output Image (OCR Only)** - Specify the output image mode:
  - **Disable** - No image is output.
  - **Cropped (default)** - The cropped image is returned only when the word is decoded. When a barcode is decoded, no image is returned.
- **OCR Confidence** - Specify the minimum confidence required to return the word decoded using OCR.
  - Integer range: 0 — 100

    - Default: 75
- **Viewfinder** - Specify whether the preview should be enabled or disabled. This parameter is only shown when the input source is set to Imager. For Camera, the preview is always shown.
- **Feedback Parameters**:
    - **Decode Audio Feedback** - Select an audio tone to play for a successful decode.
    - **Decode Haptic Feedback** - Enable/disable the device to vibrate for a successful decode.
    - **Decode LED Notification** - When enabled, the Green LED flashes to indicate a successful decode.
    - **Beep Volume Channel** - Select the volume setting to be used when playing the Decode Audio Feedback:
        - Ringer
        - Music and Media
        - Alarms
        - Notification (default)
- **Decoders** - Enable/disable decoders and configure specific decoder parameters.

OCR Wedge

OCR Wedge uses machine learning to enable fine-tuned, use-case specific models to extract data in real-time via the Zebra Android device camera without the need for a data connection.

Supported configurations:

- License Plates
- Vehicle Identification Numbers (VIN)
- Tire Identification Numbers (TIN)
- Identification Documents (for example, Driver's Licenses)
- Shipping Container IDs
- Utility Meters (Meter Reading)

NOTE: OCR Wedge is camera-only. It cannot be configured to use the device's 1D/2D imager or scanner.

Each specific model (License Plates, VIN, TIN, etc.) is licensed individually. A license for one model does not grant access to others.

Licenses are sold for fixed durations, typically in 1-year or 2-year terms.

Configuring OCR Wedge

This section goes through the process of configuring OCR Wedge.

1. Open DataWedge.
2. Choose a **Profile**.
3. Enable **Workflow Input**.
4. Tap **OCR Wedge**.

5. Choose the **Target Model**.

   Tap the specific configuration that matches your use case and for which you have a valid license (for example, **License Plates**, **VIN**, **TIN**). This loads the appropriate machine learning model for data capture.

6. Configure Model-specific parameters.

7. Configure **Feedback**.

   Set the desired user feedback for successful captures, such as audio tones (**Decode Audio Feedback**) or vibration (**Decode Haptic Feedback**). This confirms to the user that the data has been captured successfully.

8. Save and test.

Free-Form Image Capture

Free-Form Image Capture allows an image of any form (not restricted to a document or label) to be captured by either the built-in internal imager or camera, with the option to highlight and/or decode any barcode present.

The capture process is initiated with the first press of a device trigger (hard or soft), which activates a live preview session on the screen. During this preview, the system automatically detects and visually highlights any barcodes within the viewfinder to confirm they have been identified. A second trigger press then captures the image and displays it. If the Decode and Highlight Barcodes option is enabled, this second action also processes and decodes the data from all highlighted barcodes, returning both the captured image and the corresponding decoded data as the final output.

Free-Form Image Capture Configurations

This section describes the configurations available for Free-Form Image Capture.

- **Input Source** - Specifies the input source for data capture: **Imager** or **Camera**.
- **Session Timeout** - Specifies the timeout period in milliseconds.
  - Integer range: 0 – 60000 (in increments of 500)
  - Default: 10000
- **Illumination** - Enables or disables illumination during the scanning session.
- **Decode And Highlight Barcodes** - Determines if barcodes are decoded, highlighted, or both.
  - **Off** - Neither decoding nor highlighting occurs.
  - **Highlight** - Barcodes are highlighted on the screen but are not decoded.
  - **Decode and Highlight** - Barcodes are both decoded and highlighted on the screen.
- **Feedback Parameters**:
  - **Decode Audio Feedback** - Selects an audio tone from the list to play upon a successful decode.
  - **Decode Haptic Feedback** - Enables or disables device vibration upon a successful decode.
  - **Decode LED Notification** - When enabled, the green LED flashes to indicate a successful decode.
  - **Beep Volume Channel** - Selects the volume channel to use for the decode audio feedback:
    - **Ringer** - Uses the Ringer volume setting.
    - **Music and Media** - Uses the Music and Media volume setting.
    - **Alarms** - Uses the Alarms volume setting.

- **Notification** - Uses the Notification volume setting (default).

Document Capture

Document Capture enables the camera or built-in imager to capture a document as an image. As a visual aid, the entire document or its borders (border) can be optionally highlighted in the preview to ensure the entire document is captured. Another option allows the presence of a barcode to be detected, and if present, the barcode is decoded. The document is captured when the hard trigger is pressed.

Document Capture Configurations

This section describes the configurations available within Document Capture.

- **Input Source** - Specifies the input source for data capture: **Imager** or **Camera**.
- **Session Timeout** - Specifies the timeout period in milliseconds.
  - Integer range: 0 – 60000 (in increments of 500)
  - Default: 15000
- **Illumination** - Enables or disables illumination during the scanning session.
- **Barcode Presence** - Determines if a barcode is required to be present for a successful capture. If a barcode is present, it is decoded.
  - **Mandatory** - A barcode must be detected.
  - **Optional** - A barcode is not required.
- **Document Highlight Mode** - Sets how the detected document is highlighted on the screen:
  - **Border Only** - Highlights only the border of the document.
  - **Fill** - Fills the entire document area with a color overlay.
- **Document Highlight Color** - Allows the selection of the color used for the document highlight from a color picker.
- **Feedback Parameters**:
  - **Decode Audio Feedback** - Selects an audio tone from a list to play upon a successful decode.
  - **Decode Haptic Feedback** - Enables or disables device vibration upon a successful decode.
  - **Decode LED Notification** - When enabled, the green LED flashes to indicate a successful decode.
  - **Beep Volume Channel** - Selects the volume channel to use for the decode audio feedback:
    - **Ringer** - Uses the Ringer volume setting.
    - **Music and Media** - Uses the Music and Media volume setting.
    - **Alarms** - Uses the Alarms volume setting.
    - **Notification** - Uses the Notification volume setting (default).

Data Capture

This section provides information for capturing barcode data using various scanning options.

The device supports data capture using:

- Integrated SR500 imager
- Integrated SR560 imager
- Integrated AC670 imager
- Integrated camera
- Bluetooth ring scanners
  - RS507/RS507X
  - RS5100
  - RS6000
  - RS6100
- Bluetooth scanners
  - DS2278
  - DS3678
  - DS8178
  - LI3678
- USB-C scanners

Imaging

The device with an integrated 2D imager has the following features:

- Omnidirectional reading of a variety of barcode symbologies, including the most popular linear, postal, PDF417, Digimarc, and 2D matrix code types.
- The ability to capture and download images to a host for a variety of imaging applications.
- Advanced intuitive laser aiming cross-hair and dot aiming for easy point-and-shoot operation.

The imager uses imaging technology to take a picture of a barcode, stores the resulting image in memory, and executes state-of-the-art software decoding algorithms to extract the barcode data from the image.

Digital Camera

The device with an integrated camera based barcode scanning solution has the following features:

- Omnidirectional reading of a variety of barcode symbologies, including the most popular linear, postal, QR, PDF417, and 2D matrix code types.
- Cross-hair reticle for easy point-and-shoot operation.
- Picklist mode to decode a particular barcode from many in the field of view.

The solution uses the advanced camera technology to take a digital picture of a barcode, and executes state-of-the-art software decoding algorithms to extract the data from the image.

Operational Modes

The device with an integrated imager supports three modes of operation.

Activate each mode by pressing **Scan**.

- Decode mode — The device attempts to locate and decode enabled barcodes within its field of view. The imager remains in this mode as long as you hold the scan button, or until it decodes a barcode.

NOTE: To enable Picklist Mode, configure in DataWedge or set in an application using an API command.

- Picklist mode — Selectively decode a barcode when more than one barcode is in the device's field of view by moving the aiming crosshair or dot over the required barcode. Use this feature for pick lists containing multiple barcodes and manufacturing or transport labels containing more than one barcode type (either 1D or 2D).

NOTE: To enable MultiBarcode Mode, configure in DataWedge or set in an application using an API command.

- MultiBarcode Mode — In this mode, the device attempts to locate and decode a specific number of unique barcodes within its field of view. The device remains in this mode as long as you hold the scan button, or until it decodes all the barcodes.
  - The device attempts to scan the programmed number of unique barcodes (from 2 through 100). This may be a fixed amount, meaning it scans X unique barcodes, or can be set as a range to scan a different number of unique barcodes each session.
  - If there are duplicate barcodes (same symbology type and data), only one of the duplicate barcodes is decoded and the remainder are ignored. If the label has two duplicate barcodes plus another two different barcodes, a maximum of three barcodes will be decoded from that label; one will be ignored as a duplicate.
  - Barcodes can be of multiple symbology types and still be acquired together. For example, if the specified quantity for a MultiBarcode Mode scan is four, two barcodes can be symbology type Code 128 and the other two can be symbology type Code 39.
  - If the specified number of unique barcodes is not initially in view of the device, the device will not decode any data until the device is moved to capture the additional barcode(s) or time out occurs. If the device field of view contains a number of barcodes greater than the specified quantity, the device randomly decodes barcode(s) until the specified number of unique barcodes is reached. For example, if the count is set to two and eight barcodes are in the field of view, the device decodes the first two unique barcodes it sees, returning the data in random order.
  - MultiBarcode Mode does not support concatenated barcodes.

Scanning Considerations

Typically, scanning is a simple matter of aim, scan, and decode, with a few quick trial efforts to master it.

However, consider the following to optimize scanning performance:

- Range — Scanners decode optimally over a particular working range — minimum and maximum distances from the barcode. This range varies according to barcode density and scanning device optics. Scan within range for quick and constant decodes; scanning too close or too far away prevents decodes. Move the scanner closer and further away to find the right working range for the barcodes being scanned.
- Angle — Scanning angle is important for quick decodes. When the illumination/flash reflects directly back into the imager, the specular reflection can blind/saturate the imager. To avoid this, scan the barcode so that the beam does not bounce directly back. Do not scan at too sharp an angle; the scanner needs to collect scattered reflections from the scan to make a successful decode. Practice quickly shows what tolerances to work within.
- Hold the device farther away for larger symbols.
- Move the device closer for symbols with bars that are close together.

NOTE: Scanning procedures depend on the app and device configuration. An app may use different scanning procedures from the one listed above.

Scanning with Internal Imager

Use the internal imager to capture barcode data.

NOTE: The AC670 imager displays the green dash-dot-dash aimer. The SR500 and SR560 imagers display a red dot aimer.

1. Ensure that an application is open on the device and a text field is in focus (text cursor in text field).
2. Point the exit window on the top of the device at a barcode.

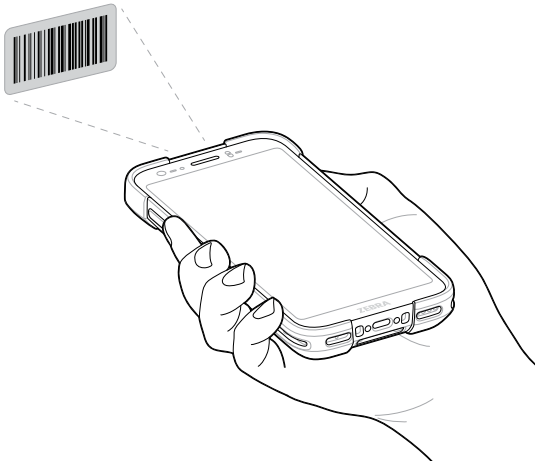

3. Press and hold the scan button.

   To assist in aiming, the red LED aiming pattern and red aiming dot turn on for the SR500 and SR560 imagers, and the green LED aiming pattern and green dash-dot-dash turn on for the AC670 imager.

NOTE: When the device is in Picklist mode, the imager does not decode the barcode until the crosshair or aiming dot touches the barcode.

4. Ensure the barcode is within the area formed in the aiming pattern. The aiming dot is used for increased visibility in bright lighting conditions.

Figure 10 Aiming Pattern

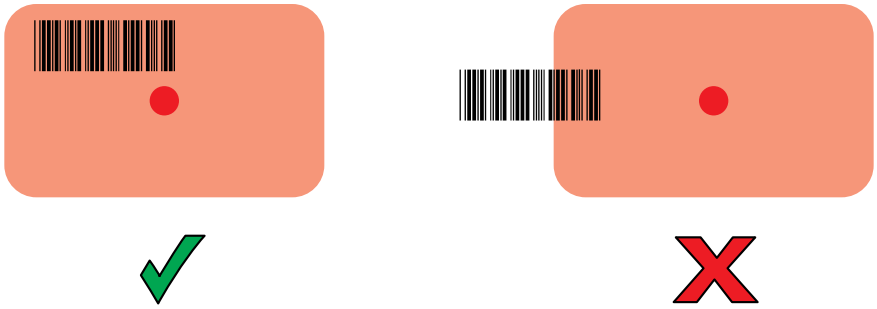

Figure 11 Pick List Mode with Multiple Barcodes in Aiming Pattern

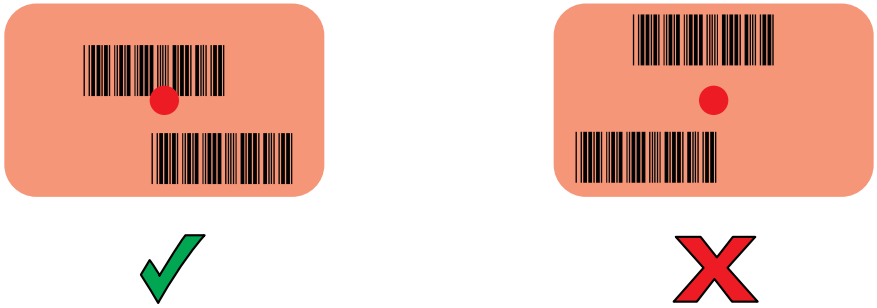

5. The Data Capture LED lights green and a beep sounds, by default, to indicate the barcode was decoded successfully.
6. Release the scan button.

NOTE: Imager decoding usually occurs instantaneously. The device repeats the steps required to take a digital picture (image) of a poor or difficult barcode as long as the scan button remains pressed.

7. The barcode content data displays in the text field.

Scanning with Internal Camera

Use the internal camera to capture barcode data.

NOTE: To read a barcode, a scan-enabled app is required. The device contains the DataWedge app that allows you to enable the scanner to decode barcode data and display the barcode content.

NOTE: The integrated camera is intended for light-duty barcode scanning. For heavy-duty scanning, 100 or more scans per day, use the 2D imager.

When capturing barcode data in poor lighting, turn on Illumination mode in the DataWedge application.

1. Point the camera window at a barcode.

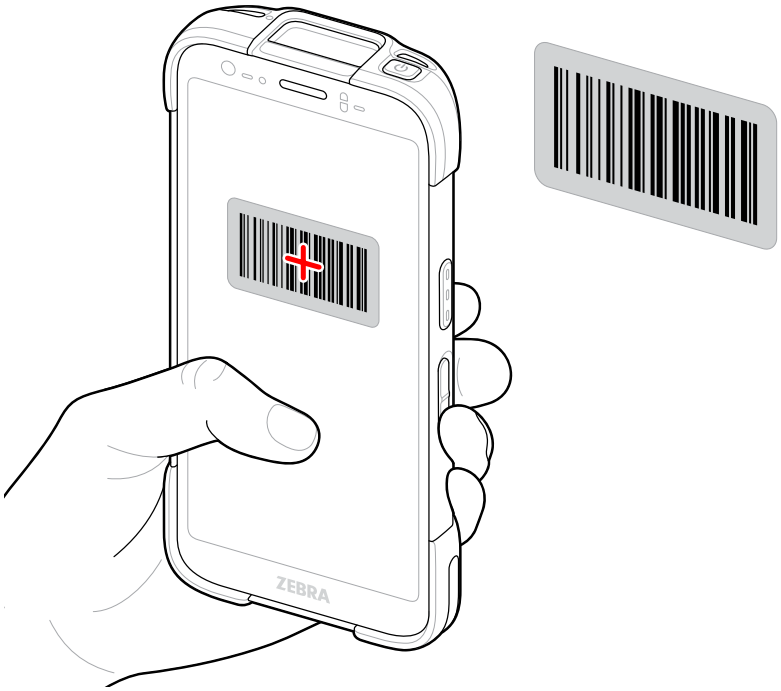

NOTE: When Picklist mode is enabled, move the device until the barcode is centered under the red target on the screen.

2. Point the camera window at a barcode.
3. Move the device until the barcode is visible on the screen.
4. The Decode LED lights green, a beep sounds and the device vibrates, by default, to indicate the barcode is decoded successfully.
5. The captured data displays in the text field.

Scanning with the RS507/RS507X Hands-Free Imager

Use the RS507/RS507X Hands-Free Imager to capture barcode data.

Figure 12 RS507/RS507X Hands-Free Imager

Refer to the RS507/RS507X Hands-free Imager Product Reference Guide for more information.

NOTE: To read a barcode, a scan-enabled app is required. The device contains the DataWedge app that allows you to enable the scanner to decode barcode data and display the barcode content.

To scan with the RS507/RS507x:

1. Pair the RS507/RS507X with the device.
2. Ensure that an app is open on the device and a text field is in focus (text cursor in text field).
3. Point the RS507/RS507X at a barcode.

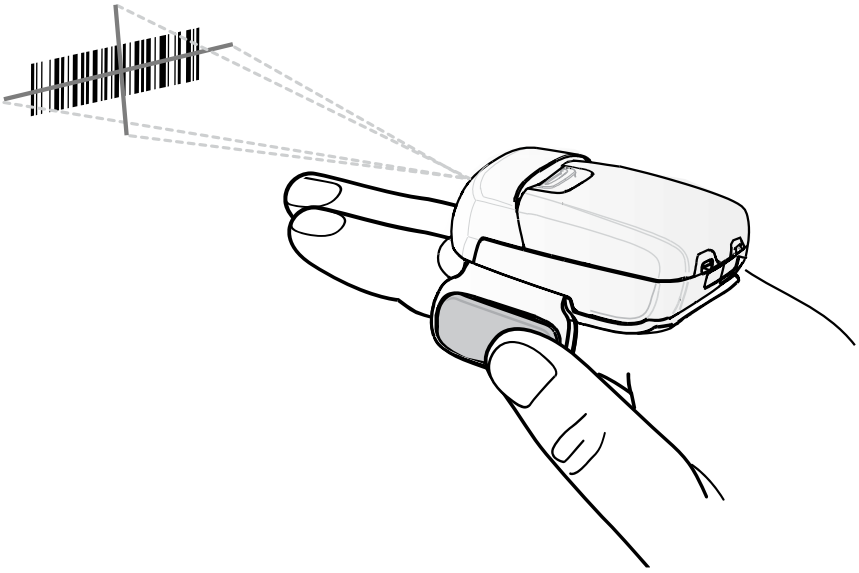

4. Press and hold the trigger.

   The red laser aiming pattern turns on to assist in aiming. Ensure the barcode is within the area formed by the cross-hairs in the aiming pattern. The aiming dot increases visibility in bright lighting conditions.

   Figure 13 RS507/RS507X Aiming Pattern

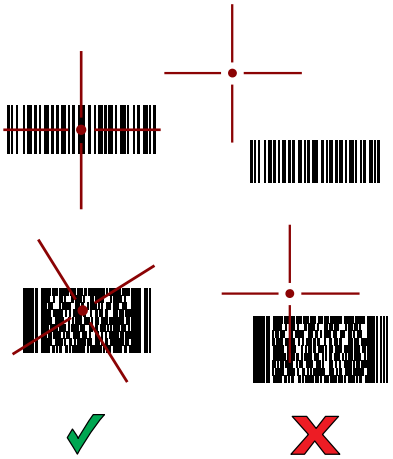

When the RS507/RS507X is in Pick List mode, the RS507/RS507X does not decode the barcode until the center of the crosshair touches the barcode.

Figure 14 RS507/RS507X Pick List Mode with Multiple Barcodes in Aiming Pattern

The RS507/RS507X LEDs light green and a beep sounds to indicate the barcode was decoded successfully.

The captured data appears in the text field.

Scanning with the RS5100 Ring Scanner

Use the RS5100 Ring Scanner to capture barcode data.

Figure 15 RS5100 Ring Scanner

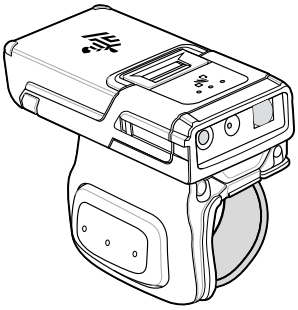

Refer to the RS5100 Ring Scanner Product Reference Guide for more information.

NOTE: To read a barcode, a scan-enabled app is required. The device contains the DataWedge app that allows you to enable the scanner to decode barcode data and display the barcode content.

To scan with the RS5100:

1. Pair the RS5100 with the device.
2. Ensure that an app is open on the device and a text field is in focus (text cursor in text field).
3. Point the RS5100 at a barcode.

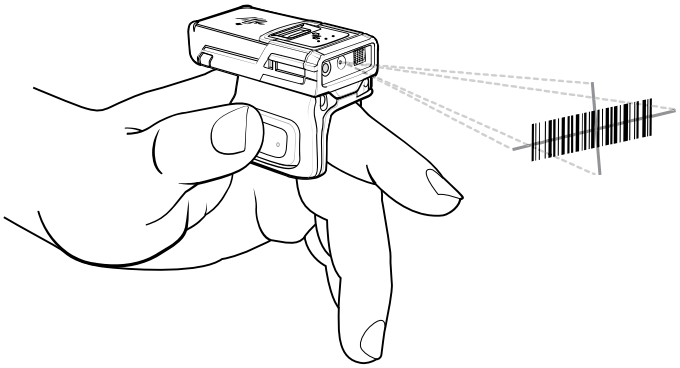

4. Press and hold the trigger.

   The red laser aiming pattern turns on to assist in aiming. Ensure the barcode is within the area formed by the cross-hairs in the aiming pattern. The aiming dot increases visibility in bright lighting conditions.

   Figure 16 RS5100 Aiming Pattern

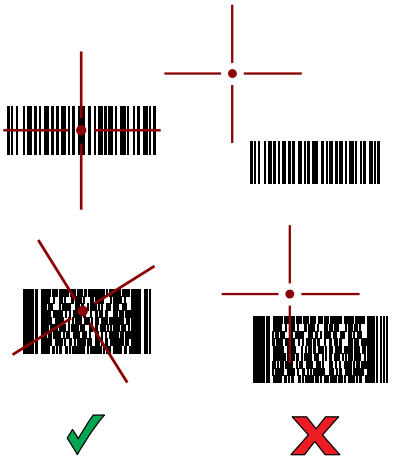

   When the RS5100 is in Pick List mode, the RS5100 does not decode the barcode until the center of the crosshair touches the barcode.

   Figure 17 RS5100 Pick List Mode with Multiple Barcodes in Aiming Pattern

   The RS5100 LEDs light green and a beep sounds to indicate the barcode was decoded successfully.

   The captured data appears in the text field.

Scanning with the RS6000 Bluetooth Ring Scanner

Use the RS6000 Bluetooth Ring Scanner to capture barcode data.

Figure 18 RS6000 Bluetooth Ring Scanner

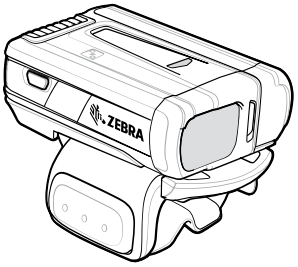

Refer to the RS6000 Bluetooth Ring Scanner Product Reference Guide for more information.

NOTE: To read a barcode, a scan-enabled app is required. The device contains the DataWedge app that enables you to use the scanner to decode barcode data and display the barcode content.

To scan with the RS6000:

1. Pair the RS6000 with the device.
2. Ensure that an app is open on the device and a text field is in focus (text cursor in text field).
3. Point the RS6000 at a barcode.

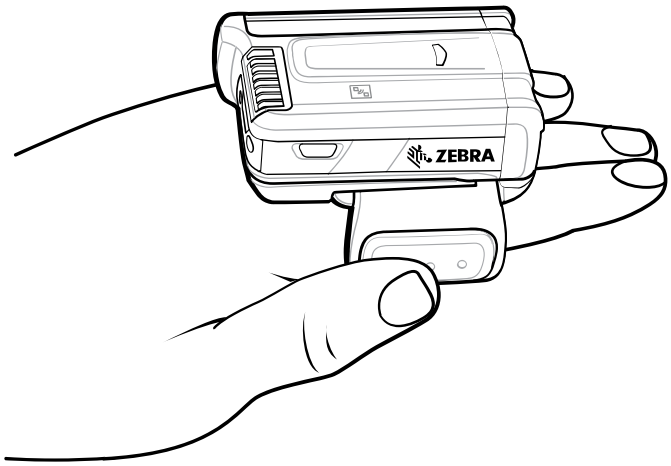

4. Press and hold the trigger.

The red laser aiming pattern turns on to assist in aiming. Ensure the barcode is within the area formed by the cross-hairs in the aiming pattern. The aiming dot increases visibility in bright lighting conditions.

Figure 19 RS6000 Aiming Pattern

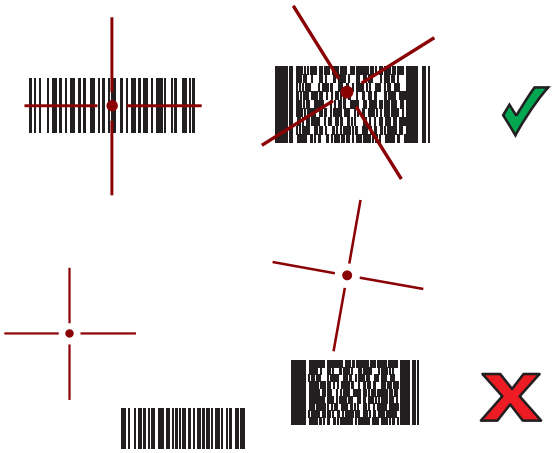

When the RS6000 is in Pick List mode, the RS6000 does not decode the barcode until the center of the crosshair touches the barcode.

Figure 20 RS6000 Pick List Mode with Multiple Barcodes in Aiming Pattern

The RS6000 LEDs light green and a beep sounds to indicate the barcode was decoded successfully.

The captured data appears in the text field.

Scanning with the RS6100 Bluetooth Ring Scanner

Use the RS6100 Bluetooth Ring Scanner to capture barcode data.

Figure 21 RS6100 Bluetooth Ring Scanner

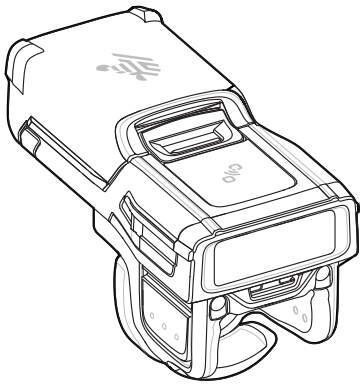

Refer to the RS6100 Bluetooth Ring Scanner Product Reference Guide for more information.

NOTE: To read a barcode, a scan-enabled app is required. The device contains the DataWedge app that allows the user to enable the scanner to decode barcode data and display the barcode content.

To scan with the RS6100:

1. Pair the RS6100 with the device.
2. Ensure that an app is open on the device and that a text field is in focus (text cursor in text field).
3. Point the RS6100 at a barcode.
4. Press and hold the trigger.

   The green laser aiming pattern turns on to assist in aiming. Ensure the barcode is within the area formed by the cross-hairs in the aiming pattern. The aiming dot increases visibility in bright lighting conditions.

   Figure 22 RS6100 Aiming Pattern

When the RS6100 is in Pick List mode, the RS6100 does not decode the barcode until the center of the crosshair touches the barcode.

Figure 23 RS6000 Pick List Mode with Multiple Barcodes in Aiming Pattern

The RS6100 LEDs light green and a beep sounds to indicate the barcode was decoded successfully.

The captured data appears in the text field.

Scanning with the DS2278 Digital Scanner

Use the DS2278 Digital Scanner to capture barcode data.

Figure 24 DS2278 Digital Scanner

Refer to the DS2278 Digital Scanner Product Reference Guide for more information.

NOTE: To read a barcode, a scan-enabled app is required. The device contains the DataWedge app that allows you to enable the scanner to decode barcode data and display the barcode content.

To scan with the DS2278:

1. Pair the DS2278 with the device. See Pairing a Bluetooth Scanner for more information.
2. Ensure that an app is open on the device and a text field is in focus (text cursor in text field).

3. Point the scanner at a barcode.

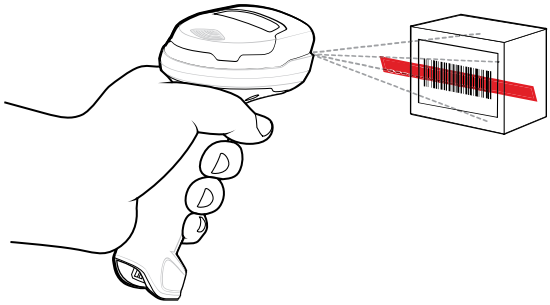

4. Press and hold the trigger.
5. Ensure the aiming pattern covers the barcode.

6. Upon successful decode, the scanner beeps and the LED flashes, and the scan line turns off. The captured data appears in the text field.

Scanning with the DS3678 Bluetooth Scanner

Use the DS3678 Bluetooth Scanner to capture barcode data.

Figure 25 DS3678 Digital Scanner

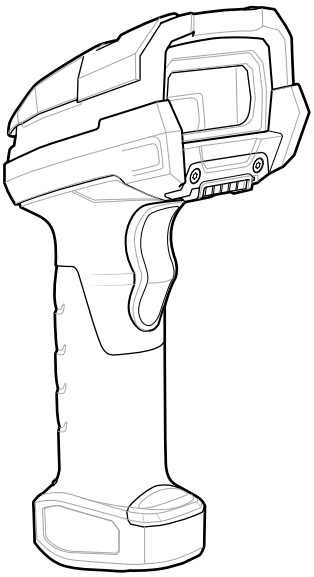

Refer to the DS3678 Product Reference Guide for more information.

NOTE: To read a barcode, a scan-enabled app is required. The device contains the DataWedge app that allows you to enable the scanner to decode barcode data and display the barcode content.

To scan with the DS3678 scanner:

1. Pair the scanner with the device. See Pairing Bluetooth Scanners for more information.
2. Ensure that an app is open on the device and a text field is in focus (text cursor in text field).
3. Point the scanner at a barcode.

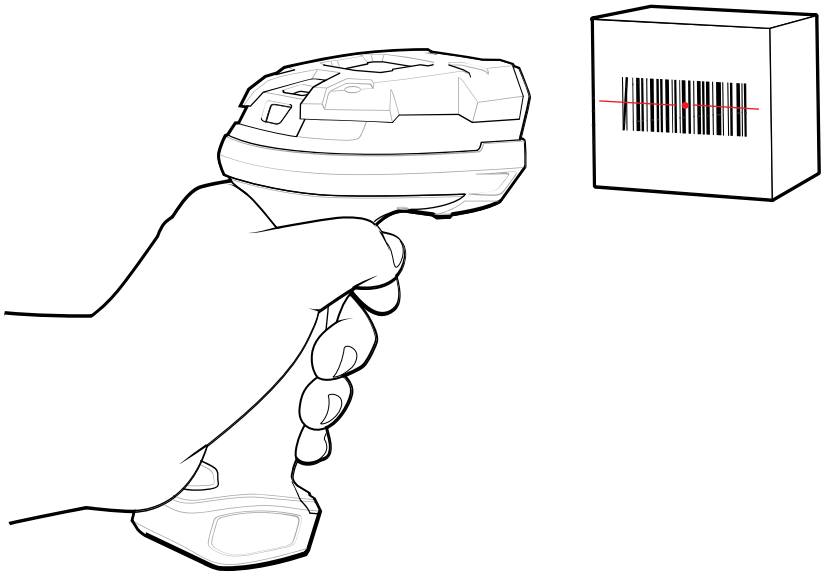

4. Press and hold the trigger.

   Ensure the barcode is within the area formed by the aiming pattern. The aiming dot increases visibility in bright lighting conditions.

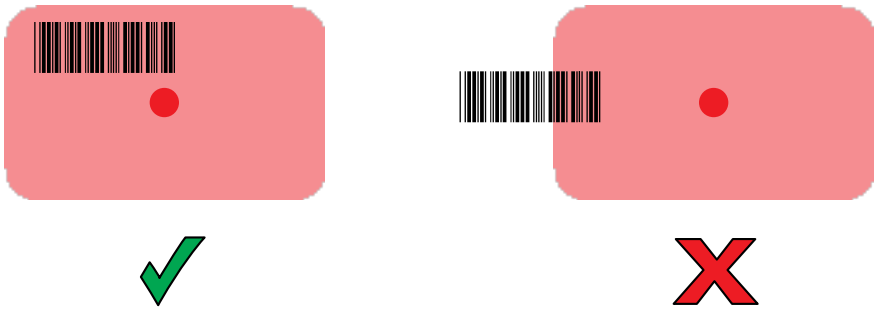

   The captured data appears in the text field.

Scanning with the DS8178 Digital Scanner

Use the DS8178 Bluetooth Scanner to capture barcode data.

Figure 26 DS8178 Digital Scanner

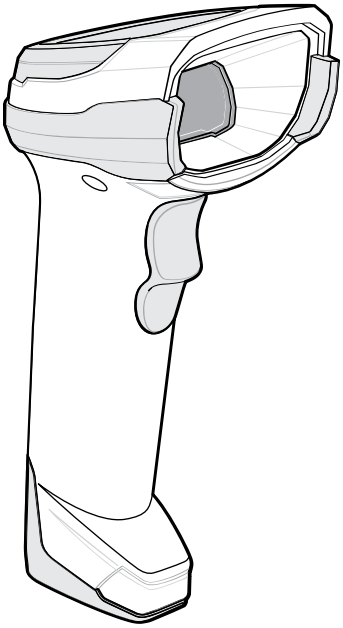

Refer to the DS8178 Digital Scanner Product Reference Guide for more information.

NOTE: To read a barcode, a scan-enabled app is required. The device contains the DataWedge app that allows you to enable the scanner to decode barcode data and display the barcode content.

To scan with the DS8178 scanner:

1. Pair the scanner with the device. See Pairing Bluetooth Scanners for more information.
2. Ensure that an app is open on the device and a text field is in focus (text cursor in text field).
3. Point the scanner at a barcode.

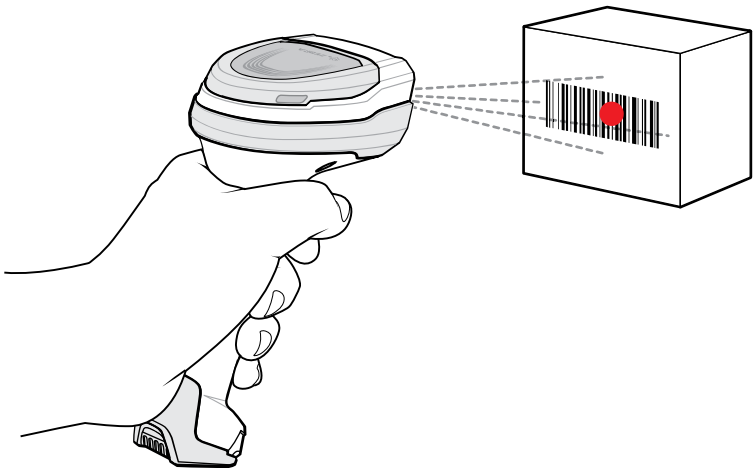

4. Press and hold the trigger.

5. Ensure the barcode is within the area formed by the aiming pattern. The aiming dot increases visibility in bright lighting conditions.

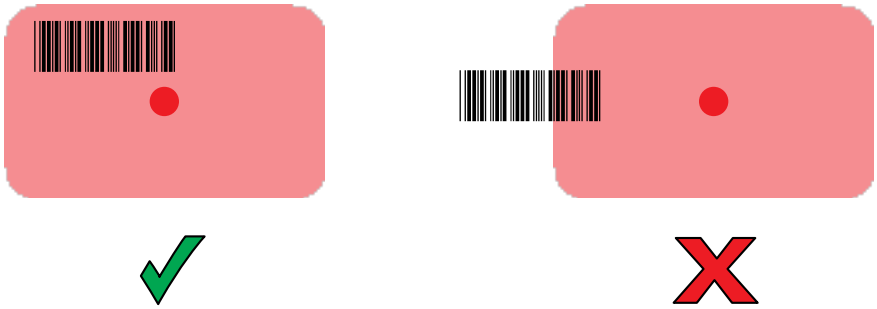

6. Upon successful decode, the scanner beeps and the LED flashes, and the scan line turns off. The captured data appears in the text field.

Scanning with the LI3678 Linear Imager

Use the LI3678 linear imager to capture barcode data.

Figure 27 LI3678 Bluetooth Scanner

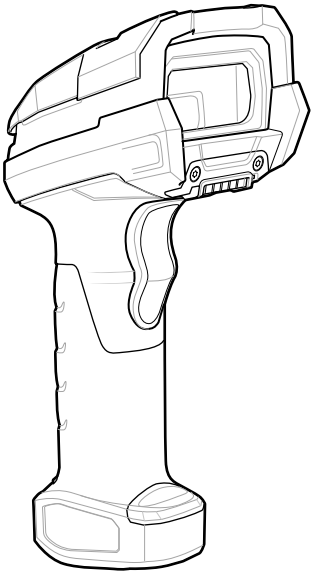

Refer to the LI3678 Product Reference Guide for more information.

NOTE: To read a barcode, a scan-enabled app is required. The device contains the DataWedge app that allows you to enable the scanner to decode barcode data and display the barcode content.

To scan with the LI3678:

1. Pair the LI3678 with the device. See Pairing a Bluetooth Scanner for more information.
2. Ensure that an app is open on the device and a text field is in focus (text cursor in text field).
3. Point the LI3678 at a barcode.
4. Press and hold the trigger.

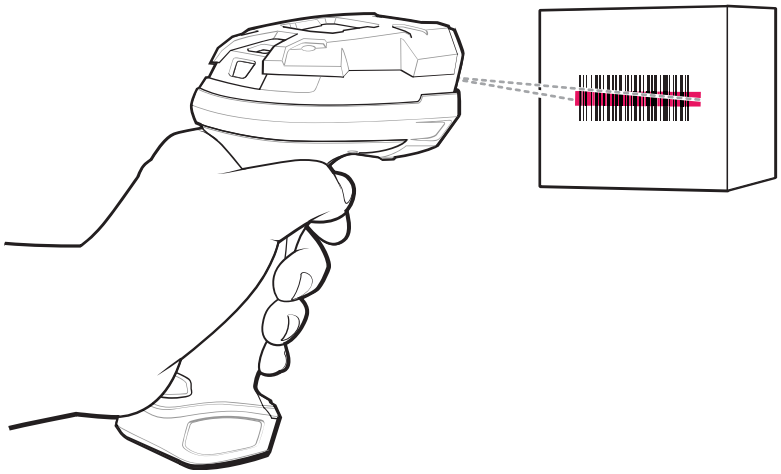

5. Ensure the aiming pattern covers the barcode.

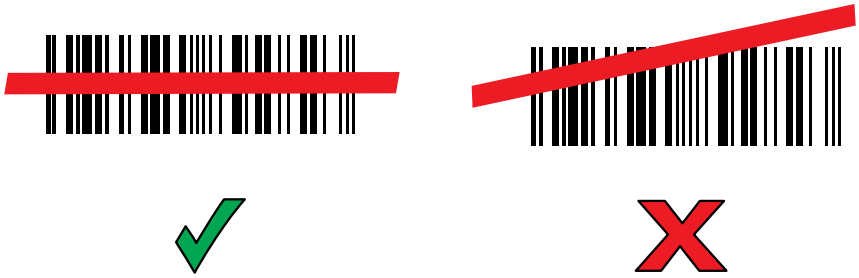

Upon successful decode, the scanner beeps and the LED displays a single green flash.

The captured data appears in the text field.

DataWedge

DataWedge is a utility that adds advanced barcode scanning capability to any application without writing code. It runs in the background and handles the interface to built-in barcode scanners. DataWedge converts the captured barcode data to keystrokes and sends it to the target application as if it were typed on the keypad.

DataWedge allows any app on the device to get data from input sources such as a barcode scanner, MSR, RFID, voice, or serial port and manipulate the data based on options or rules.

Configure DataWedge to:

- Provide data capture services from any app.
- Use a particular scanner, reader, or other peripheral devices.
- Properly format and transmit data to a specific app.

To configure DataWedge, go to techdocs.zebra.com/datawedge/.

Enabling DataWedge

This procedure provides information on how to enable DataWedge on the device.

1. Swipe up from the bottom of the Home screen and touch .

2. Touch ⋮ > **Settings**.
3. Touch the **DataWedge enabled** checkbox.

   A blue checkmark displays in the checkbox indicating that DataWedge is enabled.

Disabling DataWedge

This procedure provides information on how to disable DataWedge on the device.

1. Swipe up from the bottom of the Home screen and touch .
2. Touch ⋮.
3. Touch **Settings**.
4. Uncheck the **DataWedge enabled** checkbox.

Pairing a Bluetooth Ring Scanner

Before using a Bluetooth Ring Scanner with the device, connect the device to the Ring Scanner.

To connect the Ring Scanner to the device, use one of the following methods:

- Near Field Communication (NFC)
- Simple Serial Interface (SSI)
- Bluetooth Human Interface Device (HID) Mode

Pairing in SSI Mode Using Near Field Communication

The device provides the ability to pair the RS5100 or RS6000 Ring Scanner in SSI Mode using NFC.

NOTE: RS5100 or RS6000 Only.

1. Ensure that NFC is enabled on the device.
2. Align the NFC icon on the Ring Scanner with the NFC antenna on the front of the device.

The Status LED blinks blue indicating that the Ring Scanner is attempting to establish a connection with the device. When a connection is established, the Status LED turns off and the Ring Scanner emits a single string of low/high beeps.

A notification displays on the device screen.

The icon displays in the Status bar.

Pairing in HID Mode Using Near Field Communication

Use the "tap-to-pair" functionality to connect a Zebra ring scanner to the device in Bluetooth HID mode.

1. Ensure that Near Field Communication (NFC) is enabled on both devices.
2. Ensure that the Bluetooth device to discover is in discoverable mode.
3. Place the Ring Scanner in HID mode. If the Ring Scanner is already in HID mode, skip to step 5.
   a) Remove the battery from the Ring Scanner.

b) Press and hold **Restore**.

c) Install the battery onto the Ring Scanner.

d) Keep holding the Restore key for about five seconds until a chirp is heard and the Scan LEDs flash green.

e) Scan the barcode below to place the Ring Scanner in HID mode.

Figure 28 RS507 Bluetooth HID Barcode

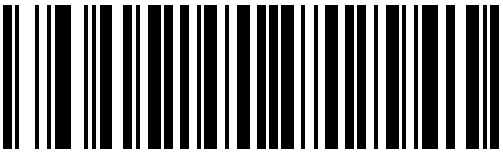

Figure 29 RS6000 Bluetooth HID Barcode

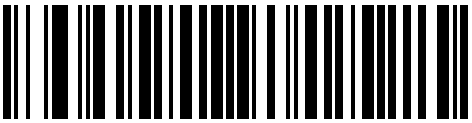

4. Remove the battery from the Ring Scanner.
5. Re-install the battery into the Ring Scanner.
6. Unlock the device.
7. Hold the ring scanner and gently tap it against the NFC antenna on the device.

   The NFC antenna is on the back of the device.
8. Observe the ring scanner's feedback after you tap it.

   The scanner emits a short beep, and its blue status LED begins to flash slowly. This indicates the scanner is attempting to establish a Bluetooth connection with the computer.
9. Accept the Bluetooth pairing request when the notification appears on the device's screen.
10. Confirm the connection is successful.

    The scanner's blue LED turns solid, and the device displays the ring scanner with a connected status in its list of paired Bluetooth devices.

You have now successfully paired the ring scanner with the device. The scanner will transmit scanned data as keyboard input.

Pairing Using Simple Serial Interface (SSI)

Pair the Ring Scanner to the device using Simple Serial Interface.

1. Swipe up from the bottom of the Home screen and touch .
2. Using the Ring Scanner, scan the barcode on the screen.

   The Ring Scanner emits a string of high/low/high/low beeps. The Scan LED flashes green indicating that the Ring Scanner is attempting to establish a connection with the device. When a connection is established, the Scan LED turns off and the Ring Scanner emits one string of low/high beeps.

   A notification displays on the Notification panel and the icon displays in the Status bar.

Pairing the Ring Scanner Using Bluetooth Human Interface Device

Pair the Ring Scanner to the device using Human Interface Device (HID).

1. Ensure that Bluetooth is enabled on both devices.
2. Ensure that the Bluetooth device to discover is in discoverable mode.
3. Ensure that the two devices are within 10 m (32.8 ft) of one another.
4. Place the Ring Scanner in HID mode. If the Ring Scanner is already in HID mode, skip to step 5.
   a) Remove the battery from the Ring Scanner.
   b) Press and hold **Restore**.
   c) Install the battery onto the Ring Scanner.
   d) Keep holding the Restore key for about five seconds until a chirp is heard and the Scan LEDs flash green.
   e) Scan the barcode below to place the Ring Scanner in HID mode.

Figure 30 RS507 Bluetooth HID Barcode

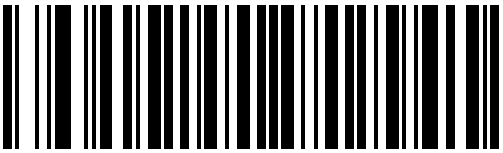

Figure 31 RS6000 Bluetooth HID Barcode

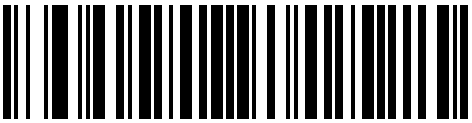

5. Remove the battery from the Ring Scanner.
6. Re-install the battery into the Ring Scanner.
7. Swipe down from the Status bar to open the Quick Access panel and then touch ⚙.
8. Touch **Bluetooth**.
9. Touch **Pair new device**. The device begins searching for discoverable Bluetooth devices in the area and displays them under **Available devices**.
10. Scroll through the list and select Ring Scanner.

    The device connects to the Ring Scanner and **Connected** displays below the device name. The Bluetooth device is added to the **Paired devices** list and a trusted ("paired") connection is established.

    A notification displays on the Notification panel and the A icon displays in the Status bar.

Pairing a Bluetooth Scanner

Before using a Bluetooth scanner with the device, connect the device to the Bluetooth scanner.

Connect the scanner to the device using one of the following methods:

- Simple Serial Interface (SSI) mode

- Bluetooth Human Interface Device (HID) mode

Pairing Using Simple Serial Interface

Pair the Ring Scanner to the device using Simple Serial Interface.

1. Swipe up from the bottom of the Home screen and touch .

2. Using the Ring Scanner, scan the barcode on the screen.

   The Ring Scanner emits a string of high/low/high/low beeps. The Scan LED flashes green indicating that the Ring Scanner is attempting to establish a connection with the device. When a connection is established, the Scan LED turns off and the Ring Scanner emits one string of low/high beeps.

   A notification displays on the Notification panel and the icon displays in the Status bar.

Pairing in SSI Mode Using Near Field Communication

The device provides the ability to pair the RS5100 or RS6000 Ring Scanner in SSI Mode using NFC.

NOTE: RS5100 or RS6000 Only.

1. Ensure that NFC is enabled on the device.
2. Align the NFC icon on the Ring Scanner with the NFC antenna on the front of the device.

The Status LED blinks blue indicating that the Ring Scanner is attempting to establish a connection with the device. When a connection is established, the Status LED turns off and the Ring Scanner emits a single string of low/high beeps.

A notification displays on the device screen.

The icon displays in the Status bar.

Supported Decoders

This section provides the supported decoders for each data capture option.

Camera Supported Decoders

This section lists the supported decoders for the internal camera.

Table 18 Camera-Supported Decoders

Decoder	Default State	Decoder	Default State	Decoder	Default State
Australian Postal	O	EAN8	X	MSI	O
Aztec	X	Grid Matrix	O	PDF417	X
Canadian Postal	O	GS1 DataBar	X	QR Code	X
Chinese 2 of 5	O	GS1 DataBar Expanded	X	Decoder Signature	O
Codabar	X	GS1 DataBar Limited	O	TLC 39	O
Code 11	O	GS1 Datamatrix	O	Trioptic 39	O
Code 128	X	GS1 QRCode	O	UK Postal	O
Code 39	X	HAN XIN	O	UPCA	X
Code 93	O	Interleaved 2 of 5	O	UPCE0	X
Composite AB	O	Japanese Postal	O	UPCE1	O
Composite C	O	Korean 3 of 5	O	US4state	O
Discrete 2 of 5	O	MAIL MARK	X	US4state FICS	O
Datamatrix	X	Matrix 2 of 5	O	US Planet	O
Dutch Postal	O	Maxicode	X	US Postnet	O
DotCode	X	MicroPDF	O		
EAN13	X	MicroQR	O		

Key: X = Enabled, O = Disabled, - = Not Supported

SR500 Internal Imager Supported Decoders

This section lists the supported decoders for the SR500 internal imager.

Table 19 SR500 Internal Imager-Supported Decoders

Decoder	Default State	Decoder	Default State	Decoder	Default State
Australian Postal	O	EAN8	X	MSI	O
Aztec	X	Grid Matrix	O	PDF417	X
Canadian Postal	O	GS1 DataBar	X	QR Code	X
Chinese 2 of 5	O	GS1 DataBar Expanded	X	Decoder Signature	O
Codabar	X	GS1 DataBar Limited	O	TLC 39	O
Code 11	O	GS1 Datamatrix	O	Trioptic 39	O
Code 128	X	GS1 QRCode	O	UK Postal	O
Code 39	X	HAN XIN	O	UPCA	X
Code 93	O	Interleaved 2 of 5	O	UPCE0	X
Composite AB	O	Japanese Postal	O	UPCE1	O
Composite C	O	Korean 3 of 5	O	US4state	O
Discrete 2 of 5	O	MAIL MARK	X	US4state FICS	O
Datamatrix	X	Matrix 2 of 5	O	US Planet	O
Dutch Postal	O	Maxicode	X	US Postnet	O
DotCode	O	MicroPDF	O		
EAN13	X	MicroQR	O		

Key: X = Enabled, O = Disabled, - = Not Supported

SR560 Internal Imager Supported Decoders

This section lists the supported decoders for the SR560 internal imager.

Table 20 SR560 Internal Imager-Supported Decoders

Decoder	Default State	Decoder	Default State	Decoder	Default State
Australian Postal	O	EAN8	X	MSI	O
Aztec	X	Grid Matrix	O	PDF417	X
Canadian Postal	O	GS1 DataBar	X	QR Code	X

Table 20 SR560 Internal Imager-Supported Decoders (Continued)

Decoder	Default State	Decoder	Default State	Decoder	Default State
Chinese 2 of 5	O	GS1 DataBar Expanded	X	Decoder Signature	O
Codabar	X	GS1 DataBar Limited	O	TLC 39	O
Code 11	O	GS1 Datamatrix	O	Trioptic 39	O
Code 128	X	GS1 QRCode	O	UK Postal	O
Code 39	X	HAN XIN	O	UPCA	X
Code 93	O	Interleaved 2 of 5	O	UPCE0	X
Composite AB	O	Japanese Postal	O	UPCE1	O
Composite C	O	Korean 3 of 5	O	US4state	O
Discrete 2 of 5	O	MAIL MARK	X	US4state FICS	O
Datamatrix	X	Matrix 2 of 5	O	US Planet	O
Dutch Postal	O	Maxicode	X	US Postnet	O
DotCode	O	MicroPDF	O		
EAN13	X	MicroQR	O		

Key: X = Enabled, O = Disabled, - = Not Supported

AC670 Internal Imager Supported Decoders

This section lists the supported decoders for the AC670 internal imager.

Table 21 AC670 Internal Imager Supported Decoders

Decoder	Default State	Decoder	Default State	Decoder	Default State
Australian Postal	X	EAN8	X	MSI	O
Aztec	X	Grid Matrix	O	PDF417	X
Canadian Postal	O	GS1 DataBar	X	QR Code	X
Chinese 2 of 5	O	GS1 DataBar Expanded	X	Decoder Signature	O
Codabar	O	GS1 DataBar Limited	X	TLC 39	O
Code 11	O	GS1 Datamatrix	O	Trioptic 39	O
Code 128	X	GS1 QRCode	O	UK Postal	X
Code 39	X	HAN XIN	O	UPCA	X

Table 21 AC670 Internal Imager Supported Decoders (Continued)

Decoder	Default State	Decoder	Default State	Decoder	Default State
Code 93	O	Interleaved 2 of 5	O	UPCE0	X
Composite AB	O	Japanese Postal	X	UPCE1	X
Composite C	O	Korean 3 of 5	O	US4state	O
Discrete 2 of 5	O	MAIL MARK	O	US4state FICS	O
Datamatrix	X	Matrix 2 of 5	O	US Planet	O
Dutch Postal	O	Maxicode	X	US Postnet	O
DotCode	O	MicroPDF	O		
EAN13	X	MicroQR	X		

Key: X = Enabled, O = Disabled, - = Not Supported

RS507/RS507x Supported Decoders

This section lists the supported decoders for the RS507/RS507x Ring Scanner.

Table 22 RS507/RS507x Supported Decoders

Decoder	Default State	Decoder	Default State	Decoder	Default State
Australian Postal	O	EAN8	X	MSI	O
Aztec	X	Grid Matrix	O	PDF417	X
Canadian Postal	-	GS1 DataBar	X	QR Code	X
Chinese 2 of 5	O	GS1 DataBar Expanded	X	Decoder Signature	O
Codabar	X	GS1 DataBar Limited	O	TLC 39	O
Code 11	O	GS1 Datamatrix	-	Trioptic 39	O
Code 128	X	GS1 QRCode	-	UK Postal	O
Code 39	O	HAN XIN	-	UPCA	X
Code 93	O	Interleaved 2 of 5	O	UPCE0	X
Composite AB	O	Japanese Postal	O	UPCE1	O
Composite C	O	Korean 3 of 5	O	US4state	O
Discrete 2 of 5	O	MAIL MARK	-	US4state FICS	O
Datamatrix	X	Matrix 2 of 5	O	US Planet	O

Table 22 RS507/RS507x Supported Decoders (Continued)

Decoder	Default State	Decoder	Default State	Decoder	Default State
Dutch Postal	O	Maxicode	X	US Postnet	O
DotCode	O	MicroPDF	O		
EAN13	X	MicroQR	O		

Key: X = Enabled, O = Disabled, - = Not Supported

RS5100 Supported Decoders

This section lists the supported decoders for the RS5100 Ring Scanner.

Table 23 RS5100-Supported Decoders

Decoder	Default State	Decoder	Default State	Decoder	Default State
Australian Postal	O	EAN8	X	MSI	O
Aztec	X	Grid Matrix	O	PDF417	X
Canadian Postal	O	GS1 DataBar	X	QR Code	X
Chinese 2 of 5	O	GS1 DataBar Expanded	X	Decoder Signature	O
Codabar	X	GS1 DataBar Limited	O	TLC 39	O
Code 11	O	GS1 Datamatrix	O	Trioptic 39	O
Code 128	X	GS1 QRCode	O	UK Postal	O
Code 39	X	HAN XIN	O	UPCA	X
Code 93	O	Interleaved 2 of 5	O	UPCE0	X
Composite AB	O	Japanese Postal	O	UPCE1	O
Composite C	O	Korean 3 of 5	O	US4state	O
Discrete 2 of 5	O	MAIL MARK	X	US4state FICS	O
Datamatrix	X	Matrix 2 of 5	O	US Planet	O
Dutch Postal	O	Maxicode	X	US Postnet	O
DotCode	O	MicroPDF	O		
EAN13	X	MicroQR	O		

Key: X = Enabled, O = Disabled, - = Not Supported

RS6000 Supported Decoders

This section lists the supported decoders for the RS6000 Ring Scanner.

Table 24 RS6000-Supported Decoders

Decoder	Default State	Decoder	Default State	Decoder	Default State
Australian Postal	O	EAN8	X	MSI	O
Aztec	X	Grid Matrix	O	PDF417	X
Canadian Postal	O	GS1 DataBar	X	QR Code	X
Chinese 2 of 5	O	GS1 DataBar Expanded	X	Decoder Signature	O
Codabar	X	GS1 DataBar Limited	O	TLC 39	O
Code 11	O	GS1 Datamatrix	O	Trioptic 39	O
Code 128	X	GS1 QRCode	O	UK Postal	O
Code 39	X	HAN XIN	O	UPCA	X
Code 93	O	Interleaved 2 of 5	O	UPCE0	X
Composite AB	O	Japanese Postal	O	UPCE1	O
Composite C	O	Korean 3 of 5	O	US4state	O
Discrete 2 of 5	O	MAIL MARK	X	US4state FICS	O
Datamatrix	X	Matrix 2 of 5	O	US Planet	O
Dutch Postal	O	Maxicode	X	US Postnet	O
DotCode	O	MicroPDF	O		
EAN13	X	MicroQR	O		

Key: X = Enabled, O = Disabled, - = Not Supported

RS6100 Supported Decoders

Lists the supported decoders for the RS6100 Ring Scanner.

Table 25 RS6100 Supported Decoders

Decoder	Default State	Decoder	Default State	Decoder	Default State
Australian Postal	O	EAN8	X	MSI	O
Aztec	X	Grid Matrix	O	PDF417	X
Canadian Postal	O	GS1 DataBar	X	QR Code	X

Table 25 RS6100 Supported Decoders (Continued)

Decoder	Default State	Decoder	Default State	Decoder	Default State
Chinese 2 of 5	O	GS1 DataBar Expanded	X	Decoder Signature	O
Codabar	X	GS1 DataBar Limited	O	TLC 39	O
Code 11	O	GS1 Datamatrix	O	Trioptic 39	O
Code 128	X	GS1 QRCode	O	UK Postal	O
Code 39	X	HAN XIN	O	UPCA	X
Code 93	O	Interleaved 2 of 5	O	UPCE0	X
Composite AB	O	Japanese Postal	O	UPCE1	O
Composite C	O	Korean 3 of 5	O	US4state	O
Discrete 2 of 5	O	MAIL MARK	X	US4state FICS	O
Datamatrix	X	Matrix 2 of 5	O	US Planet	O
Dutch Postal	O	Maxicode	X	US Postnet	O
DotCode	O	MicroPDF	O		
EAN13	X	MicroQR	O		

Key: X = Enabled, O = Disabled, - = Not Supported

DS2278 Supported Decoders

This section lists the supported decoders for the DS2278 Digital Scanner.

Table 26 DS2278 Digital Scanner-Supported Decoders

Decoder	Default State	Decoder	Default State	Decoder	Default State
Australian Postal	O	EAN8	X	MSI	O
Aztec	X	Grid Matrix	O	PDF417	X
Canadian Postal	—	GS1 DataBar	X	QR Code	X
Chinese 2 of 5	O	GS1 DataBar Expanded	X	Decoder Signature	O
Codabar	X	GS1 DataBar Limited	O	TLC 39	O
Code 11	O	GS1 Datamatrix	O	Trioptic 39	O
Code 128	X	GS1 QRCode	O	UK Postal	O
Code 39	X	HAN XIN	—	UPCA	X

Table 26 DS2278 Digital Scanner-Supported Decoders (Continued)

Decoder	Default State	Decoder	Default State	Decoder	Default State
Code 93	O	Interleaved 2 of 5	O	UPCE0	X
Composite AB	O	Japanese Postal	O	UPCE1	O
Composite C	O	Korean 3 of 5	O	US4state	O
Discrete 2 of 5	O	MAIL MARK	X	US4state FICS	O
Datamatrix	X	Matrix 2 of 5	O	US Planet	O
Dutch Postal	O	Maxicode	X	US Postnet	O
DotCode	O	MicroPDF	O		
EAN13	X	MicroQR	O		

Key: X = Enabled, O = Disabled, — = Not Supported

DS3678 Supported Decoders

This section lists the supported decoders for the DS3678 scanner.

Table 27 DS3678-Supported Decoders

Decoder	Default State	Decoder	Default State	Decoder	Default State
Australian Postal	O	EAN8	X	MSI	O
Aztec	X	Grid Matrix	O	PDF417	X
Canadian Postal	—	GS1 DataBar	X	QR Code	X
Chinese 2 of 5	O	GS1 DataBar Expanded	X	Decoder Signature	—
Codabar	X	GS1 DataBar Limited	O	TLC 39	O
Code 11	O	GS1 Datamatrix	O	Trioptic 39	O
Code 128	X	GS1 QRCode	O	UK Postal	O
Code 39	X	HAN XIN	O	UPCA	X
Code 93	O	Interleaved 2 of 5	O	UPCE0	X
Composite AB	O	Japanese Postal	O	UPCE1	O
Composite C	O	Korean 3 of 5	O	US4state	O
Discrete 2 of 5	O	MAIL MARK	X	US4state FICS	O
Datamatrix	X	Matrix 2 of 5	O	US Planet	O

Table 27 DS3678-Supported Decoders (Continued)

Decoder	Default State	Decoder	Default State	Decoder	Default State
Dutch Postal	O	Maxicode	X	US Postnet	O
DotCode	O	MicroPDF	O		
EAN13	X	MicroQR	O		

Key: X = Enabled, O = Disabled, — = Not Supported

DS8178 Supported Decoders

This section lists the supported decoders for the DS8178 Digital scanner.

Table 28 DS8178 Digital Scanner-Supported Decoders

Decoder	Default State	Decoder	Default State	Decoder	Default State
Australian Postal	O	EAN8	X	MSI	O
Aztec	X	Grid Matrix	O	PDF417	X
Canadian Postal	—	GS1 DataBar	X	QR Code	X
Chinese 2 of 5	O	GS1 DataBar Expanded	X	Decoder Signature	—
Codabar	X	GS1 DataBar Limited	O	TLC 39	O
Code 11	O	GS1 Datamatrix	O	Trioptic 39	O
Code 128	X	GS1 QRCode	O	UK Postal	O
Code 39	X	HAN XIN	—	UPCA	X
Code 93	O	Interleaved 2 of 5	O	UPCE0	X
Composite AB	O	Japanese Postal	O	UPCE1	O
Composite C	O	Korean 3 of 5	O	US4state	O
Discrete 2 of 5	O	MAIL MARK	X	US4state FICS	O
Datamatrix	X	Matrix 2 of 5	O	US Planet	O
Dutch Postal	O	Maxicode	X	US Postnet	O
DotCode	O	MicroPDF	O		
EAN13	X	MicroQR	O		

Key: X = Enabled, O = Disabled, — = Not Supported

LI3678 Supported Decoders

This section lists the supported decoders for the LI3678 scanner.

Table 29 LI3678-Supported Decoders

Decoder	Default State	Decoder	Default State	Decoder	Default State
Australian Postal	—	EAN8	X	MSI	O
Aztec	—	Grid Matrix	O	PDF417	—
Canadian Postal	—	GS1 DataBar	X	QR Code	—
Chinese 2 of 5	O	GS1 DataBar Expanded	X	Decoder Signature	—
Codabar	X	GS1 DataBar Limited	O	TLC 39	O
Code 11	O	GS1 Datamatrix	—	Trioptic 39	O
Code 128	X	GS1 QRCode	—	UK Postal	—
Code 39	X	HAN XIN	O	UPCA	X
Code 93	O	Interleaved 2 of 5	O	UPCE0	X
Composite AB	—	Japanese Postal	—	UPCE1	O
Composite C	—	Korean 3 of 5	O	US4state	—
Discrete 2 of 5	O	MAIL MARK	—	US4state FICS	—
Datamatrix	—	Matrix 2 of 5	O	US Planet	—
Dutch Postal	—	Maxicode	—	US Postnet	—
DotCode	O	MicroPDF	—		
EAN13	X	MicroQR	—		

Key: X = Enabled, O = Disabled, — = Not Supported

Wireless

This section provides information on the wireless features of the device.

The following wireless features are available on the device:

- Wireless Wide Area Network (WWAN)
- Wireless Local Area Network (WLAN)
- Bluetooth
- Cast
- Near Field Communications (NFC)

Wireless Wide Area Networks

Use Wireless wide area networks (WWANs) to access data over a cellular network.

This section provides information on:

- Sharing a data connection
- Monitoring data usage
- Changing Cellular Network settings

Sharing the Mobile Data Connection

The **Hotspot & tethering** settings allow sharing the mobile data connection with a single computer via USB tethering or Bluetooth tethering.

Share the data connection with up to eight devices at once, by turning it into a portable Wi-Fi hotspot. While the device is sharing its data connection, an icon displays at the top of the screen and a corresponding message displays in the notification list.

Enabling USB Tethering

This section describes how to enable USB Tethering.

NOTE: USB tethering is not supported on computers running macOS. If the computer is running Windows or a recent version of Linux (such as Ubuntu), follow these instructions without any special preparation. If running a version of Windows that precedes Windows 11, or some other operating system, you may need to prepare the computer to establish a network connection via USB.

1. Connect the device to a host computer with a USB cable.

   The notification **Charging this device via USB** displays in the Notifications panel.
2. Go to **Settings**.
3. Touch **Network & Internet**.
4. Touch **Hotspot & tethering**.
5. Touch the **USB tethering** switch to enable.

The host computer is now sharing the device's data connection.

To stop sharing the data connection, touch the **USB tethering** switch again or disconnect the USB cable.

Enabling Bluetooth Tethering

Use Bluetooth tethering to share the data connection with a host computer.

Configure the host computer to obtain its network connection using Bluetooth. For more information, refer to the host computer's documentation.

1. Go to **Settings**.
2. Touch **Network & Internet** > **Hotspot & tethering**.
3. Touch the **Bluetooth tethering** switch to enable.

The host computer is now sharing the device's data connection.

To stop sharing the data connection, touch the **Bluetooth tethering** switch again.

Enabling Wi-Fi Hotspot

After configuring the device as a Wi-Fi hotspot, turn on Wi-Fi hotspot to begin using it.

1. Go to **Settings** > **Network & internet** > **Hotspot & tethering**.
2. Touch the **Wi-fi hotspot** toggle to enable the feature.

Configuring the Wi-Fi Hotspot

Use Wi-Fi Hotspot to share the device's data connection with another computer.

1. Go to **Settings**.
2. Touch **Network & internet**.
3. Touch **Hotspot & tethering**.
4. Touch **Wi-Fi hotspot**.
5. Enable the **Use Wi-Fi hotspot** toggle switch to turn on Wi-Fi hotspot.
6. Touch **Hotspot** name, edit the name of the hotspot, and touch **OK**.
7. Touch **Security** and select a security method from the drop-down list.
   - **WPA3-Personal**
     a. Touch **Hotspot password**.
     b. Enter a password.
     c. Touch **OK**.

- **WPA2/WPA3-Personal**
  a. Touch **Hotspot password**.
  b. Enter a password.
  c. Touch **OK**.
- **WPA2-Personal**
  a. Touch **Hotspot password**.
  b. Enter a password.
  c. Touch **OK**.
- **None** - If **None** is selected in the Security option, a password is not required.

8. Touch **Hotspot password** to set a password.
9. Enable the **Turn off hotspot automatically** toggle switch to turn off Wi-Fi hotspot automatically when no devices are connected.
10. Touch **Extend compatibility** to allow more devices to connect to the hotspot.
11. Touch **Speed & compatibility**, and select a frequency **2.4 GHz Band**, **5.0 GHz Band**, or **6.0 GHz Band** for your hotspot.
12. Additional settings: `Regulatory Band selectedChannel selection Maximum number of clients Hotspot connected clients`

Data Usage

Data usage refers to the amount of data uploaded or downloaded by the device during a given period. Depending on the wireless plan, you may be charged additional fees when your data usage exceeds your plan's limit.

Data usage settings allow you to:

- Enable Data Saver.
- Set the data usage warning level.
- Set a data usage limit.
- View or restrict data usage by app.
- Identify mobile hotspots and restrict background downloads that may result in extra charges.

Setting Data Usage Warning

Set a warning alert when the device has used a certain amount of mobile data.

1. Go to **Settings**.
2. Touch **Network & internet** > **Mobile network** > **Data usage** > ⚙.
3. If necessary, touch **Set data warning** to enable it.
4. Touch **Data warning**.
5. Enter a number.

   To switch between megabytes (MB) and gigabytes (GB), touch the down arrow.

6. Touch **SET**.

When the data usage reaches the set level, a notification displays.

Setting Data Limit

This section describes the method for setting a data limit on your device.

1. Go to **Settings**.
2. Touch **Network & internet** > **Mobile network** > **Data usage** > ⚙.
3. Touch **Set data limit**.
4. Touch **OK**.
5. Touch **Data limit**.
6. Enter a number.

   To switch between megabytes (MB) and gigabytes (GB), touch the down arrow.
7. Touch **Set**.

When the limit is reached, data automatically turns off and a notification displays.

Cellular Network Settings

Cellular network settings applies to WWAN devices only.

Data When Roaming

Roaming is disabled by default to prevent the device from transmitting data over other carriers' mobile networks when leaving an area that is covered by the carrier's networks. This is useful for controlling expenses if the service plan does not include data roaming.

Enabling Data on GSM Devices

1. Go to **Settings**.
2. Touch **Networking & Internet** > **Mobile network**.
3. Touch **Roaming**.

The switch moves to the on position.

Setting Preferred Network

Change the device network operating mode.

1. Go to **Settings**.
2. Touch **Network & Internet** > **Mobile network** > **Advanced**.
3. Touch **Automatically select network**.
4. Touch **Network**.
5. In the **Available network** list, select a carrier network.

Configuring the Access Point Name

To use the data on a network, configure the APN information.

NOTE: Many service provider Access Point Name (APN) data are pre-configured in the device. The APN information for all other service providers must be obtained from the wireless service provider.

1. Go to **Settings**.
2. Touch **Network & Internet** > **Mobile network** > **Advanced**.
3. Touch **Access Point Names**.
4. Touch an APN name in the list to edit an existing APN or touch **+** to create a new APN.
5. Touch each APN setting and enter the appropriate data obtained from the wireless service provider.
6. When finished, touch ⋮ > **Save**.
7. Touch the radio button next to the APN name to start using it.

Activating an eSIM

Activating an eSIM on the device.

Before adding an eSIM, contact your carrier to obtain the eSIM service and its activation or QR code.

NOTE: Ensure Airplane mode is turned **OFF**.

1. On the device, establish an internet connection via Wi-Fi or cellular data with an installed SIM card.
2. Go to **Settings**.
3. Touch **Network & internet** > **Mobile Networks**.
4. Touch **+** next to **SIMs** if a SIM card is already installed, or touch **SIMs** if there is no SIM card installed.

NOTE: A secure lock screen must be created or already in use to proceed.

   The **Mobile network** screen displays.

5. Select either:
   - **MANUAL CODE ENTRY** to enter the activation code, or
   - **SCAN** to scan the QR code to download the eSIM profile.

   The **Confirmation!!!** dialog box displays.
6. Touch **OK**.
7. Enter the activation code or scan the QR Code.

NOTE: If you are manually entering the activation code, you will have to select **Next** to proceed.

   The **Downloading a profile** message displays, followed by the **Use <Network Name>?** message.

8. Touch **ACTIVATE**.
9. Touch **Done**.

   The eSIM is now active.

Deactivating an eSIM

Turn off an eSIM temporarily and re-activate it later.

1. On the device, establish an internet connection via Wi-Fi or cellular data with an installed SIM card.
2. Tap **Settings** > **Network & internet** > **SIMs**.
3. In the **Downloaded SIM** section, tap the name of the eSIM to deactivate.
4. Tap the **Use this SIM** switch to turn off the eSIM.

   The Confirmation dialog box displays.
5. Tap **Turn off**.

   The eSIM is deactivated.

Reactivating an eSIM

Once the eSIM is deactivated, you can reactivate it.

1. Touch the **Use this SIM** switch to turn on the eSIM.
2. Touch **Yes**.

   The eSIM is reactivated.

Erasing an eSIM Profile

Erasing an eSIM profile removes it completely from the device.

NOTE: After erasing an eSIM from the device, you cannot use it again.

1. On the device, establish an internet connection via Wi-Fi or cellular data with an installed SIM card.
2. Tap **Settings** > **Network & internet** > **SIMs**.
3. In the **Downloaded SIM** section, tap the name of the eSIM.
4. Tap **Erase eSIM**.

   The **Erase this eSIM?** message displays.
5. Tap **Erase**.

   The eSIM profile is now erased from the device.

Locking the SIM Card

Locking the SIM card requires you to enter a PIN every time the device is turned on. If the correct PIN is not entered, only emergency calls can be made.

1. Go to **Settings**.
2. Touch **Security** > **SIM card lock**.
3. Touch **Lock SIM card**.
4. Enter the PIN associated with the card.
5. Touch **OK**.
6. Reset the device.

Wireless Local Area Network

An overview of the wireless local area network (WLAN) security protocols supported by the device.

Wireless local area networks (WLANs) allow the device to communicate wirelessly. Before using the device on a WLAN, the facility's infrastructure (access points, switches, servers, and so on) must be set up and properly configured.

Once the infrastructure is configured, use the **Settings** > **Network & internet** menu on the device to configure it to match the network's security scheme.

The device supports the following WLAN security options:

- **None**

  An open network with no security.

- **Enhanced Open (OWE)**

  Provides unauthenticated encryption for open networks, protecting against passive sniffing.

- **WEP**

  Wireless Equivalent Privacy, an older and less secure protocol.

- **WPA/WPA2/WPA3-Personal**

  Secures the network using a pre-shared key (PSK), also known as a password. This is the most common method for home and small office networks.

- **WPA/WPA2/WPA3-Enterprise**

  Secures the network by requiring each user to authenticate with unique credentials, typically against a RADIUS server. This method uses the Extensible Authentication Protocol (EAP) and supports the following methods:

  - PEAP (Protected Extensible Authentication Protocol) - with MSCHAPV2 and GTC authentication.
  - TLS (Transport Layer Security)
  - TTLS (Tunneled Transport Layer Security) - with PAP, MSCHAP, MSCHAPV2, and GTC authentication.
  - LEAP (Lightweight Extensible Authentication Protocol)
  - AKA (Authentication and Key Agreement)
  - AKA' (Improved AKA)
  - SIM (Subscriber Identity Module)

IMPORTANT: GTC authentication without a password (Dynamic GTC), used in some PEAP and TTLS configurations, may require a specific Mobility DNA Enterprise License.

Connecting to a Wi-Fi Network

Most of the device's functionality requires an internet connection. Connect to an available Wi-Fi network to use the device features.

1. Go to **Settings**.
2. Touch **Network & internet**.
3. Touch **Internet** to open the Internet screen.

4. Enable the **Wi-Fi** toggle switch.

   The device searches for WLANs in the area and lists them.

5. Scroll through the list and select the desired WLAN network.
6. For open networks, touch the profile once or press and hold and then select **Connect** or for secure networks, enter the required password or other credentials, then touch **Connect**. See the system administrator for more information.

   The device obtains a network address and other required information from the network using the dynamic host configuration protocol (DHCP). To configure the device with a fixed internet protocol (IP) address, go to Configuring the Device to Use a Static IP Address.

7. In the Wi-Fi setting field, **Connected** displays, indicating that the device is connected to the WLAN.

Removing a Wi-Fi Network

Remove a remembered or connected Wi-Fi network.

1. Go to **Settings**.
2. Touch **Network & Internet**.
3. Touch **Internet**.
4. Disable the **Wi-Fi** toggle switch.
5. Touch **Saved networks**.
6. Touch the name of the network.
7. Touch **Forget**.

WLAN Configuration

This section provides information on configuring Wi-Fi settings.

Configuring a Secure Wi-Fi Network

Add a Wi-Fi network on the device to connect to the internet.

1. Go to **Settings**.
2. Touch **Network & Internet**.
3. Touch **Internet**.
4. Slide the Wi-Fi switch to the **ON** position.

   The device searches for WLANs in the area and lists them on the screen.

5. Scroll through the list and select the desired WLAN network.
6. Touch the desired network. If network security is **Open**, the device automatically connects to the network. For all other network security, a dialog box displays.
7. If network security is **WPA/WPA2-Personal**, or **WEP**, enter the required password and then touch **Connect**.
8. If network security is **WPA/WPA2-Enterprise** or **WPA3-Enterprise**:

a) Touch the **EAP method** drop-down list and select one of the following:

- **PEAP**
- **TLS**
- **TTLS**
- **PWD**
- **SIM**
- **AKA**
- **AKA'**

b) Fill in the appropriate information. Options vary depending on the **EAP method** chosen.

- When selecting **CA certificate**, Certification Authority (CA) certificates are installed using the **Security** settings.
- When using the EAP methods PEAP, TLS, or TTLS, specify a domain.
- Touch **Advanced options** to display additional network options.

9. If the network security is **WPA3-Enterprise 192-bit**:

- Touch **CA certificate** and select a Certification Authority (CA) certificate.

NOTE: Certificates are installed using the Security settings.

- For WPA3-Enterprise 192-bit, specify a domain.
- Touch **User certificate** and select a user certificate.

NOTE: User certificates are installed using the Security settings.

- In the **Identity** text box, enter the username credentials.

NOTE: By default, the network Proxy is set to None and the IP settings is set to DHCP. Go toConfiguring for a Proxy Server for setting the connection to a proxy server and go toConfiguring the Device to Use a Static IP Address for setting the device to use a static IP address.

10. Touch **Connect**.

Manually Adding a Wi-Fi Network

Manually add a Wi-Fi network if the network does not broadcast its name (SSID) or to add a Wi-Fi network when out of range.

1. Go to **Settings**.
2. Touch **Network & Internet**.
3. Touch **Internet**.
4. Slide the Wi-Fi switch to the **On** position.
5. Scroll to the bottom of the list and select **Add network**.
6. In the **Network name** text box, enter the name of the Wi-Fi network.

7. In the **Security** drop-down list, set the type of security to:
   - None
   - Enhanced Open
   - WEP
   - WPA/WPA2-Personal
   - WPA3-Personal
   - WPA/WPA2-Enterprise/WPA3-Enterprise
   - WPA3-Enterprise 192-bit
8. If the network security is **None** or **Enhanced Open**, touch **Save**.
9. If the network security is **WEP**, **WPA3-Personal**, or **WPA/WPA2-Personal**, enter the required password and then touch **Save**.
10. If the network security is **WEP** or **WPA/WPA2-Personal**, enter the required password and then touch **Save**.

NOTE: By default, the network Proxy is set to None and the IP settings is set to DHCP. Go to Configuring for a Proxy Server for setting the connection to a proxy server and go to Configuring the Device to Use a Static IP Address for setting the device to use a static IP address.

11. If network security is **WPA/WPA2-Enterprise/WPA3-Enterprise**:
    a) Touch the **EAP method** drop-down list and select one of the following:
       - **PEAP**
       - **TLS**
       - **TTLS**
       - **PWD**
       - **SIM**
       - **AKA**
       - **AKA'**
    b) Fill in the appropriate information. Options vary depending on the **EAP method** chosen.
       - When selecting **CA certificate**, Certification Authority (CA) certificates are installed using the **Security** settings.
       - When using the EAP methods PEAP, TLS, or TTLS, specify a domain.
       - Touch **Advanced options** to display additional network options.
12. If the network security is **WPA3-Enterprise 192-bit**:
    - Touch **CA certificate** and select a Certification Authority (CA) certificate.

NOTE: Certificates are installed using the Security settings.

- For WPA3-Enterprise 192-bit, specify a domain.
- Touch **User certificate** and select a user certificate.

NOTE: User certificates are installed using the Security settings.

- In the **Identity** text box, enter the username credentials.

13. Touch **Save**. To connect to the saved network, touch and hold on the saved network and select **Connect to network**.

Configuring for a Proxy Server

A proxy server is a server that acts as an intermediary for requests from clients seeking resources from other servers. A client connects to the proxy server and requests some service, such as a file, connection, web page, or other resource, available from a different server. The proxy server evaluates the request according to its filtering rules. For example, it may filter traffic by IP address or protocol. If the request is validated by the filter, the proxy provides the resource by connecting to the relevant server and requesting the service on behalf of the client.

It is important for enterprise customers to be able to set up secure computing environments within their companies, making proxy configuration essential. Proxy configuration acts as a security barrier ensuring that the proxy server monitors all traffic between the Internet and the intranet. This is normally an integral part of security enforcement in corporate firewalls within intranets.

1. Go to **Settings**.
2. Touch **Network & Internet**.
3. Touch **Internet**.
4. Slide the Wi-Fi switch to the **On** position.
5. In the network dialog box, select and touch a network.
6. If configuring the connected network, touch ✎ to edit the network details and then touch the down arrow to hide the keyboard.
7. Touch **Advanced options**.
8. Touch **Proxy** and select **Manual**.
9. In the **Proxy hostname** text box, enter the address of the proxy server.
10. In the **Proxy port** text box, enter the port number for the proxy server.
11. In the **Bypass proxy for** text box, enter addresses for web sites that are not required to go through the proxy server. Use a comma "," between addresses. Do not use spaces or carriage returns between addresses.
12. If configuring the connected network, touch **Save** otherwise, touch **Connect**.
13. Touch **Connect**.

Configuring the Device to Use a Static IP Address

By default, the device is configured to use Dynamic Host Configuration Protocol (DHCP) to assign an Internet protocol (IP) address when connecting to a wireless network.

1. Go to **Settings**.
2. Touch **Network & Internet**.
3. Touch **Internet**.
4. Slide the Wi-Fi switch to the **On** position.
5. In the network dialog box, select and touch a network.

6. If configuring the connected network, touch ✎ to edit the network details and then touch the down arrow to hide the keyboard.
7. Touch **Advanced options**.
8. Touch **IP settings** and select **Static**.
9. In the **IP address** text box, enter an IP address for the device.
10. If required, in the **Gateway** text box, enter a gateway address for the device.
11. If required, in the **Network prefix length** text box, enter the prefix length.
12. If required, in the **DNS 1** text box, enter a Domain Name System (DNS) address.
13. If required, in the **DNS 2** text box, enter a DNS address.
14. If configuring the connected network, touch **Save** otherwise, touch **Connect**.

Wi-Fi Preferences

Use the Wi-Fi preferences to configure advanced Wi-Fi settings. From the Wi-Fi screen, scroll down and touch **Network preferences**.

- **Turn on Wi-Fi automatically** - When enabled, Wi-Fi automatically turns back on when near high-quality saved networks.
- **Notify for public networks** - When enabled, notifies when an open network is available.
- **Allow WEP networks** - When enabled, connects to WEP-secured networks.
- **Additional settings** - Touch to view additional Wi-Fi settings.
- **Install Certificates** - Touch to install certificates.
- **Wi-Fi Direct** - Displays a list of devices available for a direct Wi-Fi connection.

Additional Wi-Fi Settings

Use the Additional Settings to configure additional Wi-Fi settings.

NOTE: Additional Wi-Fi settings are for the device, not for a specific wireless network.

- **Regulatory**
  - **Country Selection** - Displays the acquired country code if 802.11d is enabled, else it displays the currently selected country code.
  - **Region code** - Displays the current region code.
- **Band and Channel Selection**
  - **Wi-Fi frequency band** - Set the frequency band to:
    - **Auto** (default)
    - **5 GHz only**
    - **2.4 GHz only**
    - **6 GHz only**
    - **2.4 GHz and 5 GHz**
    - **2.4 GHz and 6 GHz**

        - **5 GHz and 6 GHz**
    - **Available channels (2.4 GHz)** - Touch to display the **Available channels** menu. Select specific channels and touch **OK**.
    - **Available channels (5 GHz)** - Touch to display the **Available channels** menu. Select specific channels and touch **OK**.
    - **Available channels (6 GHz)** - Touch to display the **Available channels** menu. Select specific channels and touch **OK**.
- **Logging**
    - **Advanced Logging** - Touch to enable logging, enable Wi-Fi Verbose Logging, or change the log directory.
    - **Wireless logs** - Use to capture Wi-Fi log files.
        - **Fusion Logger** - Touch to open the **Fusion Logger** application. This application maintains a history of high level WLAN events which helps to understand the status of connectivity.
        - **Fusion Status** - Touch to display live status of WLAN state. Also provides information about the device and connected profile.
- **About**
    - **Version** - Displays the current version information. Touch the version to display addition version details.

Enabling Wi-Fi Direct

Wi-Fi Direct devices can connect to each other without having to go through an access point. Wi-Fi Direct devices establish their own ad-hoc network when required, letting you see which devices are available and choose which one to connect to.

1. Go to **Settings**.
2. Touch **Network & internet**.
3. Touch **Internet**.
4. Slide the **Wi-Fi** switch to the **On** position.
5. Scroll down to the bottom of the screen and touch **Network preferences** > **Wi-Fi Direct**. The device begins searching for another Wi-Fi Direct device.
6. Touch the name of the other device.
7. On the other device, select **Accept**.

   Connected displays on the device. On both devices, in their respective Wi-Fi Direct screens, the other device name displays in the list.

Bluetooth

Bluetooth devices can communicate without wires, using frequency-hopping spread spectrum (FHSS) radio frequency (RF) to transmit and receive data in the 2.4 GHz Industry Scientific and Medical (ISM) band (802.15.1). Bluetooth wireless technology is specifically designed for short-range (10 m (32.8 ft)) communication and low power consumption.

Devices with Bluetooth capabilities can exchange information (for example, files, appointments, and tasks) with other Bluetooth-enabled devices such as printers, access points, and other mobile devices.

Furthermore, devices that support Bluetooth Low Energy (BLE) are a critical feature for modern enterprise applications. BLE is targeted for data-collection applications in healthcare, retail, and manufacturing, offering reduced power consumption and lower costs while maintaining the standard Bluetooth range. This enables use cases such as asset tracking with Bluetooth beacons, location-based services within a facility, and connecting to various sensors and peripherals without significantly impacting device battery life.

Adaptive Frequency Hopping

Adaptive Frequency Hopping (AFH) is a method of avoiding fixed frequency interferers, and can be used with Bluetooth voice. All devices in the piconet (Bluetooth network) must be AFH-capable in order for AFH to work. There is no AFH when connecting and discovering devices. Avoid making Bluetooth connections and discoveries during critical 802.11b communications.

AFH for Bluetooth consists of four main sections:

- Channel Classification - A method of detecting an interference on a channel-by-channel basis, or pre-defined channel mask.
- Link Management - Coordinates and distributes the AFH information to the rest of the Bluetooth network.
- Hop Sequence Modification - Avoids interference by selectively reducing the number of hopping channels.
- Channel Maintenance - A method for periodically re-evaluating the channels.

When AFH is enabled, the Bluetooth radio “hops around” (instead of through) the 802.11b high-rate channels. AFH coexistence allows enterprise devices to operate in any infrastructure.

The Bluetooth radio in this device operates as a Class 2 device power class. The maximum output power is 2.5 mW and the expected range is 10 m (32.8 ft). A definition of ranges based on power class is difficult to obtain due to power and device differences, and whether in open space or closed office space.

NOTE: It is not recommended to perform Bluetooth wireless technology inquiry when high rate 802.11b operation is required.

Security

The current Bluetooth specification defines security at the link level. Application-level security is not specified. This allows application developers to define security mechanisms tailored to their specific needs. Link-level security occurs between devices, not users, while application-level security can be implemented on a per-user basis. The Bluetooth specification defines security algorithms and procedures required to authenticate devices, and if needed, encrypt the data flowing on the link between the devices. Device authentication is a mandatory feature of Bluetooth while link encryption is optional.

Pairing of Bluetooth devices is accomplished by creating an initialization key used to authenticate the devices and create a link key for them. Entering a common personal identification number (PIN) in the devices being paired generates the initialization key. The PIN is never sent over the air. By default, the Bluetooth stack responds with no key when a key is requested (it is up to you to respond to the key request event). Authentication of Bluetooth devices is based upon a challenge-response transaction. Bluetooth allows for a PIN or passkey used to create other 128-bit keys used for security and encryption. The encryption key is derived from the link key used to authenticate the pairing devices. Also, the limited range and fast frequency hopping of the Bluetooth radios make long-distance eavesdropping difficult.

Recommendations are:

- Perform pairing in a secure environment.
- Keep PIN codes private and do not store the PIN codes in the device.
- Implement application-level security.

Bluetooth Profiles

The device supports the Bluetooth services listed.

Table 30 Bluetooth Profiles

Profile	Description
Advanced Audio Distribution Profile (A2DP)	Allows the device to stream stereo-quality audio to a wireless headset or wireless stereo speakers.
Audio/Video Remote Control Profile (AVRCP)	Allows the device to control A/V equipment to which a user has access. It may be used in concert with A2DP.
Dial Up Networking (DUN)	Provides a standard to access the Internet and other dial-up services over Bluetooth.
Generic Attribute Profile (GATT)	Provides profile discovery and description services for Bluetooth Low Energy protocol. It defines how attributes are grouped together into sets to form services.
Generic Access Profile (GAP)	Use for device discovery and authentication.
Human Interface Device Profile (HID)	Allows Bluetooth keyboards, pointing devices, gaming devices and remote monitoring devices to connect to the device.
Hands-Free Profile (HFP)	Allows car hands-free kits to communicate with the device in the car.
Headset Profile (HSP)	Allows a hands-free device, such as a Bluetooth headset, to place and receive calls on the device.
OBject EXchange (OBEX)	Facilitates the exchange of binary objects between devices.
Object Push Profile (OPP)	Allows the device to push and pull objects to and from a push server.
Out of Band (OOB)	Allows exchange of information used in the pairing process. Pairing is completed using the Bluetooth radio, but requires information from the OOB mechanism. Using OOB with NFC enables pairing when devices simply get close, rather than requiring a lengthy discovery process.
Personal Area Network (PAN)	Allows the use of Bluetooth Network Encapsulation Protocol to provide L3 networking capabilities over a Bluetooth link. Only PANU role is supported.
Phone Book Access Profile (PBAP)	Allows exchange of Phone Book Objects between a car kit and a mobile device to allow the car kit to display the name of the incoming caller; allow the car kit to download the phone book so you can initiate a call from the car display.
Serial Port Profile (SPP)	Allows use of RFCOMM protocol to emulate serial cable connection between two Bluetooth peer devices. For example, connecting the device to a printer.
Service Discovery Protocol (SDP)	Handles the search for known and specific services as well as general services.

Table 30 Bluetooth Profiles (Continued)

Profile	Description
Symbol Serial Interface (SSI)	Allows for communication with Bluetooth Imager.

Bluetooth Power States

The Bluetooth radio is off by default.

- **Suspend** - When the device goes into Sleep mode, the Bluetooth radio stays on.
- **Airplane Mode** - When the device is placed in Airplane Mode, the Bluetooth radio is not turned off when the device is connected to a Bluetooth headset or hearing device.

Bluetooth Radio Power

Turn off the Bluetooth radio to save power or if entering an area with radio restrictions (for example, an airplane). When the radio is off, other Bluetooth devices cannot see or connect to the device. Turn on the Bluetooth radio to exchange information with other Bluetooth devices (within range). Communicate only with Bluetooth radios in close proximity.

NOTE: To achieve optimal battery life, turn off radios when not in use.

Enabling Bluetooth

This section describes the method for enabling Bluetooth.

1. Swipe down from the Status bar to open the Notification panel.
2. Touch ✱ to turn Bluetooth on (the Bluetooth icon is gray when it is disabled).

Disabling Bluetooth

This section describes the method for disabling Bluetooth.

1. Swipe down from the Status bar to open the Notification panel.
2. Touch ✱ to turn Bluetooth off.

Discovering Bluetooth Device(s)

The device can receive information from discovered devices without pairing. However, once paired, the device and a paired device exchange information automatically when the Bluetooth radio is on.

1. Ensure that Bluetooth is enabled on both devices.
2. Ensure that the Bluetooth device to discover is in discoverable mode.
3. Ensure that the two devices are within 10 m (32.8 ft) of one another.
4. Swipe down from the Status bar to open the Quick Access panel.
5. Touch and hold **Bluetooth**.

6. Touch **Pair new device**. The device begins searching for discoverable Bluetooth devices in the area and displays them under **Available devices**.
7. Scroll through the list and select a device. The Bluetooth pairing request dialog box displays.
8. Touch **Pair** on both devices.
9. The Bluetooth device is added to the **Paired devices** list and a trusted ("paired") connection is established.

Changing the Bluetooth Name

By default, the device has a generic Bluetooth name that is visible to other devices when connected.

1. Go to **Settings**.
2. Touch **Connected devices** > **Connection preferences** > **Bluetooth**.
3. If Bluetooth is not on, move the switch to turn Bluetooth on.
4. Touch **Device name**.
5. Enter a name and touch **RENAME**.

Connecting to a Bluetooth Device

Once paired, connect to a Bluetooth device.

1. Go to **Settings**.
2. Touch **Connected devices** > **Connection preferences** > **Bluetooth**.
3. In the list, touch the unconnected Bluetooth device.

   When connected, **Connected** displays below the device name.

Selecting Profiles on the Bluetooth Device

Some Bluetooth devices have multiple profiles.

1. Go to **Settings**.
2. Touch **Connected devices** > **Connection preferences** > **Bluetooth**.
3. In the **Paired Devices** list, touch ⚙ next to the device name.
4. Turn on or off a profile to allow the device to use that profile.

Unpairing a Bluetooth Device

Unpairing a Bluetooth device erases all pairing information.

1. Go to **Settings**.
2. Touch **Connected devices** > **Connection preferences** > **Bluetooth**.
3. In the **Paired Devices** list, touch ⚙ next to the device name.
4. Touch **FORGET**.

Cast

Use **Cast** to mirror the device screen on a Miracast enabled wireless display.

1. Go to **Settings**.
2. Touch **Connected devices** > **Connection preferences** > **Cast**.
3. Touch ⋮ > **Enable wireless display**.

   The device searches for nearby Miracast devices and lists them.
4. Touch a device to begin casting.

Near Field Communication

NFC/HF RFID is a short-range wireless connectivity technology standard that enables a secure transaction between a reader and a contactless smartcard.

The technology is based on ISO/IEC 14443 type A and B, FeliCa (proximity) ISO/IEC 15693 (vicinity) standards, using the HF 13.56 MHz unlicensed band.

The device supports the following operating modes:

- Reader mode.
- Card Emulation mode.

The device also supports ECP polling.

Using NFC, the device can:

- Read contactless cards, such as contactless tickets, ID cards, and ePassport.
- Read and write information to contactless cards, such as SmartPosters and tickets, as well as devices with an NFC interface, such as vending machines.
- Read information from supported medical sensors.
- Pair with supported Bluetooth devices such as printers, ring scanners (for example, RS6000), and headsets (for example, HS3100).
- Emulate a contactless card such as a ticket.

The device's NFC antenna is positioned to read NFC cards from the top of the device while the device is being held.

Reading NFC Cards

Read contactless cards using NFC.

1. Launch an NFC-enabled application.
2. Press the NFC card against the back of the device.

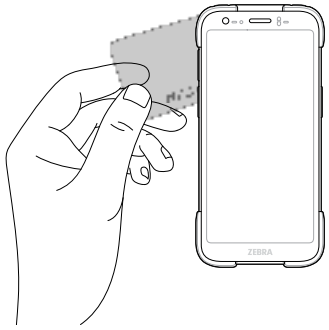

3. Hold the card steadily until the transaction is complete (usually indicated by the application).

Enterprise NFC Settings

Improve NFC performance or increase battery life by selecting which NFC features to use on the device.

- **Card Detection Mode** - Select a card detection mode.
  - **Low** - Increases battery life by lowering the NFC detection speed.
  - **Hybrid** - Provides a balance between NFC detection speed and battery life (default).
  - **Standard** - Provides the best NFC detection speed, but reduces battery life (Mandatory setting for ECP Polling).
- **Supported Card Technology** - Select an option to detect only one NFC tag type, increasing battery life, but reducing detection speed.
  - **ISO 14443 Type A**
  - **ISO 14443 Type B**
  - **FeliCa**
  - **ISO15693**
- **NFC Debug Logging** - Use to enable or disable debug logging for NFC.
- **Other NFC settings available with Zebra administrator tools (CSP):**
  - **Communication speed for Type A and Type B cards and ISO 14443-4 cards** - Higher rate improves transaction speed.
  - **NDEF Support** - Improves card detection speed for non-NDEF cards.
  - **CPU Speed** - Boosts CPU speed during short NFC transactions, improves transaction speed.
  - **Card Emulation** - Enables workaround for Card Emulation interoperability issues.
  - **Reset to Factory Defaults** - Default settings are reset to factory defaults.

Calls

Make a phone call from the Phone app, the Contacts app, or other apps or widgets that display contact information.

NOTE: This section applies to WWAN devices only.

Emergency Calling

The service provider programs one or more emergency phone numbers, such as 911 or 999, that you can call at any time, even when the phone is locked, a SIM card is not inserted, or the phone is not activated. The service provider can program additional emergency numbers into the SIM card. However, the SIM card must be inserted into the device to use the numbers stored on it. Talk to the service provider for additional information.

NOTE: Emergency numbers vary by country. The phone's pre-programmed emergency number(s) may not work in all locations, and sometimes an emergency call cannot be placed due to network, environmental, or interference issues.

Audio Modes

The device offers three audio modes for use during phone calls.

- Handset Mode - Switch audio to the receiver at the top front of the device to use the device as a handset. This is the default mode.
- Speaker Mode - Use the device as a speakerphone.
- Headset Mode - Connect a Bluetooth or wired headset to automatically switch audio to the headset.

Bluetooth Headset

Use a Bluetooth headset for audio communication when using an audio-enabled app.

Go to Bluetooth for information on connecting a Bluetooth headset to the device. Set the volume appropriately before putting on the headset. When a Bluetooth headset is connected, the speakerphone is muted.

Adjusting Audio Volume

Use the volume buttons to adjust the phone volume.

- Ring and notification volumes when not in a call.
- Conversation volume during a call.

Making a Call Using the Dialer

Use the dialer tab to dial phone numbers.

1. On the Home screen touch .
2. Touch .
3. Touch the keys to enter the phone number.
4. Touch below the dialer to initiate the call.

	Send audio to the speakerphone.
	Mute the call.
	Display the dial pad.
	Place the call on hold (not available on all services).
	Create a conference call.
	Increase audio level.

5. Touch to end the call.

   If using a Bluetooth headset, additional audio options are available. Touch the audio icon to open the audio menu.

	Audio is routed to the Bluetooth headset.
	Audio is routed to the speakerphone.
	Audio is routed to the earpiece.

Accessing Dialing Options

The dialer provides options to save the dialed number to contacts, send an SMS, or insert pauses and wait into the dial string.

- Enter at least one digit in the dialer, then touch .
  - **Add 2–sec pause** - Pause the dialing of the next number for two seconds. Multiple pauses are added sequentially.
  - **Add wait** - Wait for confirmation to send the rest of the digits.

Make a Call Using Contacts

There are two ways to make a call using contacts, using the Dialer or using the Contacts app.

Using the Dialer

Use the dialer tab to dial phone numbers.

1. On the Home screen touch .
2. Touch .
3. Touch the contact.
4. Touch to initiate the call.

	Send audio to the speakerphone.
	Mute the call.
	Display the dial pad.
	Place the call on hold (not available on all services).
	Create a conference call.
	Increase audio level.

5. Touch to end the call.

   If using a Bluetooth headset, additional audio options are available. Touch the audio icon to open the audio menu.

	Audio is routed to the Bluetooth headset.
	Audio is routed to the speakerphone.
	Audio is routed to the earpiece.

Using the Contacts App

This section describes the method for using the contacts app.

1. Touch .
2. Touch a contact name.
3. Touch to initiate the call.

Make a Call Using Call History

Call History is a list of all the calls placed, received, or missed. It provides a convenient way to redial a number, return a call, or add a number to Contacts.

Arrow icons beside a call indicate the type of call. Multiple arrows indicate multiple calls.

Table 31 Call Type Indicators

Icon	Description
	Missed incoming call
	Received incoming call
	Outgoing call

Using the Call History List

This section describes using the call history list to make a call.

1. On the Home screen touch .
2. Touch the tab.
3. Touch next to the contact to initiate the call.
4. Touch the contact to perform other functions.
5. Touch to end the call.

Making a Conference Call on GSM

Create a conference phone session with multiple people.

NOTE: Conference Calling and the number of conference calls allowed may not be available on all services. Please check with the service provider for Conference Calling availability.

1. On the Home screen touch .
2. Touch .
3. Touch the keys to enter the phone number.
4. Touch below the dialer to initiate the call.
5. When the call connects, touch .

   The first call is placed on hold.
6. Touch .
7. Touch the keys to enter the second phone number.
8. Touch below the dialer to initiate the call.

   When the call connects, the first call is placed on hold and the second call is active.
9. Touch to create a conference call with three people.
10. Touch to add another call.

    The conference is placed on hold.
11. Touch .

12. Touch the keys to enter another phone number.
13. Touch below the dialer to initiate the call.
14. Touch icon to add the third call to the conference.
15. Touch **Manage conference call** to view all callers.

	Remove a caller from the conference.
	Speak privately with one party during a conference call.
	Include all parties again.

Making a Call Using a Bluetooth Headset

This section describes the method for making a call using a Bluetooth headset.

1. Pair the Bluetooth headset with the device.
2. Press the Call button on the Bluetooth headset.
3. Press the Call button on the Bluetooth headset to end the call.

Answering Calls

When receiving a phone call, the **Incoming Call** screen displays the caller ID and any additional information about the caller that is in the **Contacts** app.

NOTE: Not all options are available for all configurations.

To modify phone call settings, on the Home screen touch > > **Settings**.

- Touch **ANSWER** to answer the call or **DECLINE** to send the caller to voice mail.

  If the screen lock is enabled, the user can answer the call without unlocking the device.
- When a call arrives:
  - Touch and slide up to answer the call.
  - Touch and slide down to send the call to voice mail.
  - Touch to open a list of quick text responses. Touch one to send it to the caller immediately.

  When the calls ends, the device remains locked.

  If using a Bluetooth headset when a call arrives, touch the Call button on the Bluetooth headset to answer the call. To end the call press the headset Call button.

  All incoming calls are recorded in the Phone app Call log tab. If you miss a call, you receive a notification. To silence the ringer before answering the call, press the volume down button on the side of device.

Call Settings

To modify phone call settings, on the Home screen touch > > **Settings**.

NOTE: Not all options are available for all configurations

- **Display options**
  - **Sort by** - Set to **First name** or **Last name**.
  - **Name format** - Set to **First name first** or **Last name first**.
- **Sounds and vibrations** - Touch to edit the general sound settings for the device.
- **Quick responses** - Touch to edit quick responses to use instead of answering a call.
- **Speed dial settings** - Set speed dial contact shortcuts.
- **Calling accounts**
  - **Settings** - Touch a mobile provider to display options for that provider.
    - **Fixed Dialing Numbers** - Set to only allow the phone to dial the phone number(s) or area code(s) specified in a Fixed Dialing list.
    - **Call forwarding** - Set to forward incoming calls to a different phone number.

NOTE: Call Forwarding may not be available on all networks. Check with the service provider for availability.

    - **Additional Settings**
      - **Caller ID** - Set caller ID to reveal the identity of the person making an outgoing call. Options: Network default (default), Hide number, Show number.
      - **Call waiting** - Set to be notified of an incoming call while on a call.
  - **SIP accounts** - Choose to receive Internet calls for accounts added to the device, view or change SIP accounts, or add an Internet calling account.
  - **Use SIP calling** - Set to **For all calls** or **Only for SIP calls** (default).
  - **Receive incoming calls** - Enable to allow incoming calls (default - disabled).
  - **Wi-Fi calling** - Enable to allow Wi-Fi calling and set the Wi-Fi calling preference (default - disabled).
  - **Call barring** - Set to block certain types of incoming or outgoing calls.
- **Blocked numbers** - Set to block calls and texts from certain phone numbers. Touch ADD A NUMBER to block a phone number.
- **Voicemail** - Configure voicemail settings.
  - **Notifications** - Configure voicemail notification settings.
    - **Importance** - Set the notification importance to Urgent, High (default), Medium, or Low.
    - **Alerting** - Touch to receive sound and vibration notifications when a voicemail is received. Use toggle switches to enable or disable Pop on screen, Blink light, Show notification dot, and Override Do Not Disturb.
    - **Silent** - Touch to silence sound and vibration notifications when a voicemail is received. Use toggle switches to enable or disable Minimize, Show notification dot, and Override Do Not Disturb.

        - **Sound** - Select a sound to play for notifications from this app.
        - **Vibrate** - Allow notifications from this app to vibrate the device.
        - **Blink light** - Allow notifications from this app the light the Notification LED blue.
        - **Show notification dot** - Allow notifications from this app to add a notification dot to the app icon.
        - **Override Do Not Disturb** - Allow these notifications to interrupt when Do Not Disturb is enabled.
    - **Advanced Settings**
        - **Service** - Set the service provider or other provider for voicemail service.
        - **Setup** - Select to update the phone number used to access voicemail.
- **Accessibility**
    - **Hearing aids** - Select to enable hearing aid compatibility.
    - **RTT settings** - Configure Real-time text (RTT) settings.
        - **Real-time text (RTT) call** - Select to allow messaging during a call.
        - **Set RTT visibility** - Set to Visible during calls (default) or Always visible.

Accessories

This section provides information for using the accessories for the device. The following table lists the accessories available for the device.

Accessory	Part Number	Description
1-Slot Fast-Charging Cradle	CRDCUP-TC7A-1DF	TC701 Fast-Charging Charging Cradle for a Single Device. Charges from 0-70% in about 45 minutes. Sold separately: USB-C Cable (CBL-EC5X-USBC3A-01) and Power Adaptor (PWR-WUA5V45W1XX).
1-Slot Ethernet Charging Cradle	CRD-TC7A-1SE	TC701 Ethernet Charging Cradle for a Single Device. Charges from 0-90% in about 1.5 hours. Includes an Ethernet Port and spare USB-C port. Sold separately: USB-C Cable (CBL-EC5X-USBC3A-01) and Power Adaptor (PWR-WUA5V45W1XX).
2-Slot Charging Cradle	CRDCUP-TC7A-2D	TC701 Charge-Only Charging Cradle for Two Devices. Charges from 0-90% in about 1.5 hours. Sold separately: USB-C Cable (CBL-EC5X-USBC3A-01) and Power Adaptor (PWR-WUA5V45W1XX).
1-Slot and Spare Battery Charging Cradle	CRD-TC7A-2SC1B	TC701 Charge-Only Charging Cradle for a Single Device and its Spare Battery. Charges from 0-70% in about 45 minutes. Sold separately: USB-C Cable (CBL-EC5X-USBC3A-01) and Power Adaptor (PWR-WUA5V45W1XX).
1-Slot and One Battery Ethernet Charging Cradle	CRD-TC7A-2SE1B	TC701 Ethernet Charging Cradle for a Single Device and its Spare Battery. Charges from 0-90% in about 1.5 hours. Includes an Ethernet Port and spare USB-C port. Sold separately: USB-C Cable (CBL-EC5X-USBC3A-01) and Power Adaptor (PWR-WUA5V45W1XX).
5-Slot Fast-Charging Cradle	CRD-TC7A-5SC5DF-1	TC701 Fast-Charging Charging Cradle for Five Devices. Mountable on a standard 19-inch rack system. Includes Power Supply. Sold Separately: Country-Specific AC Line Cord.
5-Slot Ethernet Charging Cradle	CRD-TC7A-5SE5D-1	TC701 Ethernet Charging Cradle for Five Devices. Mountable on a standard 19-inch rack system. Includes Power Supply. Sold Separately: Country-Specific AC Line Cord.

Accessory	Part Number	Description
5-Slot and Spare Batteries Charging Cradle	CRD-TC7A-5SC5D5B-1	TC701 Charge-Only Charging Cradle for Five Devices and Five Spare Batteries. Mountable on a standard 19-inch rack system. Includes Power Supply. Sold Separately: Country-Specific AC Line Cord.
10-Slot Charging Cradle	CRD-TC7A-5SC10D-1	TC701 Charge-Only Charging Cradle for 10 Devices. Mountable on a standard 19-inch rack system. Includes Power Supply. Sold Separately: Country-Specific AC Line Cord.
5-Slot Charging Cradle	CRD-TC7A-5SC5DF	TC701 Fast-Charging Charging Cradle for Five Devices. Can be mounted on a standard 19-inch rack system. Sold Separately: Power Supply with Attached DC Cable (PWR-BGA12V150W1WW) and Country-Specific AC Line Cord.
5-Slot Ethernet Charging Cradle	CRD-TC7A-5SE5D	TC701 Ethernet Charging Cradle for Five Devices. Can be mounted on a standard 19-inch rack system. Sold Separately: Power Supply with Attached DC Cable (PWR-BGA12V150W1WW) and Country-Specific AC Line Cord.
5-Slot and Spare Batteries Charging Cradle	CRD-TC7A-5SC5D5B	TC701 Charge-Only Charging Cradle for Five Devices and Five Spare Batteries. Can be mounted on a standard 19-inch rack system. Sold Separately: Power Supply with Attached DC Cable (PWR-BGA12V150W1WW) and Country-Specific AC Line Cord.
10-Slot Charging Cradle	CRD-TC7A-5SC10D	TC701 Charge-Only Charging Cradle for 10 Devices. Can be mounted on a standard 19-inch rack system. Sold Separately: Power Supply with Attached DC Cable (PWR-BGA12V150W1WW) and Country-Specific AC Line Cord.
1-Slot Replacement Charging Cradle Cup	CRDCUP-NGTC7A-01	TC701 Replacement Charge-Only Device Cup for One Device. Enables the use of TC701 devices with Legacy Charging Cradles. Includes a pre-installed TC701 shim.
5-Slot Replacement Charging Cradle Cup	CRDCUP-NGTC7A-05	A set of five TC701 Replacement Charge-Only Device Cups. Enables the use of TC701 devices with Legacy Charging Cradles. Includes pre-installed TC701 shims.
1-Slot Replacement Ethernet Charging Cradle Cup	CRDCUP-NGTC7AE-01	TC701 Replacement Ethernet Device Cup for One Device. Enables the use of TC701 devices with Legacy Charging Cradles. Includes a pre-installed TC701 shim.
5-Slot Replacement Ethernet Charging Cradle Cup	CRDCUP-NGTC7AE-05	A set of five TC701 Replacement Ethernet Device Cups. Enables the use of TC701 devices with Legacy Charging Cradles. Includes pre-installed TC701 shims.
TC701 Shim	SHIM-CRD-TC7A	Replaces the TC73/TC78 shim to make Legacy Charging Cradles compatible with TC701 devices.

Accessory	Part Number	Description
TC701 Holder	HLD-TC7A-01	TC701 Holder for Devices. Included in all Charging Cradles designed for devices.
Ethernet Single-Slot Charging Cradle Base	CRD-ETHSNGLEBASE-01	Included in all single-slot Ethernet Charging Cradle Configurations.
Fast-Charging Charging Cradle Base	CRD-FCBASE-01	Included in all multi-slot Charging Cradles except for the Ethernet model.
Ethernet Charging Cradle Base	CRD-ETHBASE-01	Included in the multi-slot Ethernet Charging Cradle configuration.
Mounting Bracket	BRKT-SCRD-SMRK-01	Use to attach 5-slot TC701 Charging Cradles to the wall or mount on a 19-inch server rack. Compatible with all multi-slot Charging Cradles for TC701.
Standard Capacity Battery	BTRY-TC5A7A-SC-01	TC701 Standard Capacity Battery with PowerPrecision Plus. Premium-grade battery cells with longer lifecycle.
Extended Capacity Battery	BTRY-TC5A7A-EC-01	TC701 Extended Capacity Battery with PowerPrecision Plus. Premium-grade battery cells with longer lifecycle.
Wireless Charging Battery	BTRY-TC5A7A-WC-01	TC701 Standard Capacity Battery with Wireless Charging and PowerPrecision Plus. Premium-grade battery cells with longer lifecycle.
Spare Battery Charger	CRDCUP-TC5A7A-4B	Spare Battery Charger to Charge any Four TC701 Li-ion batteries. Can be used standalone or mounted on Mounting Bracket (BRKT-SCRD-SMRK-01). Sold separately.
Power Supply Brick	PWR-BGA12V150W1WW	Level VI AC/DC power supply brick. AC Input: 100-240V, 2.5A. DC Output: 12V, 12.5A, 150W. To be used with Country-Specific AC Line Cords.
USB-C Cable	CBL-EC5X-USBC3A-01	USB-C to USB-C Communications and Charging Cable, 1M Long. Used with PWR-WUA5V45W1XX power adaptors.
Power Supply (US)	PWR-WUA5V45W1US	USB Type-C power supply adaptor with United States plug. Sold separately. Used with USB-C Cable (CBL-EC5X-USBC3A-01).
Power Supply (EU)	PWR-WUA5V45W1EL	USB Type-C power supply adaptor with European Union plug. Sold separately. Used with USB-C Cable (CBL-EC5X-USBC3A-01).
Power Supply (UK)	PWR-WUA5V45W1GB	USB Type-C power supply adaptor with United Kingdom plug. Sold separately. Used with USB-C Cable (CBL-EC5X-USBC3A-01).
Power Supply (Australia)	PWR-WUA5V45W1AU	USB Type-C power supply adaptor with Australia plug. Sold separately. Used with USB-C Cable (CBL-EC5X-USBC3A-01).
Power Supply (China)	PWR-WUA5V45W1CN	USB Type-C power supply adaptor with China plug. Sold separately. Used with USB-C Cable (CBL-EC5X-USBC3A-01).
Power Supply (Korea)	PWR-WUA5V45W1KR	USB Type-C power supply adaptor with Korea plug. Sold separately. Used with USB-C Cable (CBL-EC5X-USBC3A-01).

Accessory	Part Number	Description
Power Supply (India)	PWR-WUA5V45W1IN	USB Type-C power supply adaptor with India plug. Sold separately. Used with USB-C Cable (CBL-EC5X-USBC3A-01).
Power Supply (Argentina)	PWR-WUA5V45W1AR	USB Type-C power supply adaptor with Argentina plug. Sold separately. Used with USB-C Cable (CBL-EC5X-USBC3A-01).
Power Supply (Brazil)	PWR-WUA5V45W1BR	USB Type-C power supply adaptor with Brazil plug. Sold separately. Used with USB-C Cable (CBL-EC5X-USBC3A-01).
AC Line Cord (NA, 7.5ft)	23844-00-00R	North America (United States, Canada, Mexico), 7.5 feet long.
AC Line Cord (NA, 3ft)	50-16000-678R	North America (United States, Canada, Mexico), 0.9 meters (3 feet long).
AC Line Cord (NA, 6ft)	50-16000-221R	North America (United States, Canada, Mexico), 1.8 meters (6 feet long).
AC Line Cord (Brazil)	50-16000-727R	Brazil, 1.8 meters (6 feet) long.
AC Line Cord (Argentina)	50-16000-680R	Argentina, 1.8 meters (6 feet) long.
AC Line Cord (Australia/ New Guinea)	50-16000-217R	American Samoa, Australia, New Guinea, 1.8 meters (6 feet) long.
AC Line Cord (Japan)	50-16000-218R	Japan, 1.8 meters (6 feet) long.
AC Line Cord (UK/HK)	50-16000-219R	Antigua, Bermuda, Burma, Channel Islands, Hong Kong, Iraq, Ireland, Malaysia, North Ireland, Scotland, Singapore, United Kingdom, Wales, 1.8 meters (6 feet) long.
AC Line Cord (China)	50-16000-257R	China, 1.8 meters (6 feet) long.
AC Line Cord (Europe)	50-16000-220R	Europe, Abu Dhabi, Bolivia, Dubai, Egypt, Iran, Korea, Russia, Vietnam, 1.8 meters (6 feet) long.
AC Line Cord (Italy)	50-16000-671R	Italy, 1.8 meters (6 feet) long.
AC Line Cord (India/ South Africa)	50-16000-669R	India, South Africa, Africa, 1.8 meters (6 feet) long.
AC Line Cord (US, 2-Prong)	50-16000-182R	United States, Type A NEMA 1-15 plug, Ungrounded 2-Prong.
AC Line Cord (Europe, 2-Prong)	50-16000-255R	Europe, Abu Dhabi, Bolivia, Dubai, Egypt, Iran, Korea, Russia, Vietnam. Type-C CEE7/16 plug, Ungrounded 2-Prong.
AC Line Cord (UK, 2-Prong)	50-16000-670R	Bermuda, Hong Kong, Iraq, Ireland, Malaysia, Singapore, United Kingdom. Ungrounded 2-Prong.
Hand Strap	SG-TC5A7A-HDSTP-01	TC701 Hand Strap. Attaches directly to device and includes loop for optional stylus.
Hand Strap (3-pack)	SG-TC5A7A-HDSTP-03	3-pack of TC701 Hand Straps.
Screen Protector	SG-TC5A7A-SCRNP-01	TC701 Screen protector - Tempered glass. Includes alcohol wipes, cleaning cloth, and installation instructions.

Accessory	Part Number	Description
Screen Protector (3-pack)	SG-TC5A7A-SCRNP-03	3-pack of TC701 screen protectors - Tempered glass.
Soft Holster	SG-NGTC5TC7-HLSTR-01	TC701 Soft Holster. Vertical orientation with open bucket design to accommodate optional trigger handle and/or hand strap.
Stylus	SG-STYLUS-TCX-MTL-03	TC701 Stylus. Heavy-duty stainless steel/brass construction. 5" length with micro-knit, hybrid-mesh, fiber tip.
Stylus Tether	SG-TC5NGTC7NG-TETHR-03	TC701 Stylus Tether. String type tether prevents loss of stylus. Attaches to hand strap.
Electronic Trigger Handle	TRG-TC7A-ELEC-01	TC701 Electronic Trigger Handle. Offers a gun form factor for scan-intensive situations. Does not block rear camera. Optional wrist strap sold separately.
Wrist Strap	50-12500-066	Attaches to bottom of Snap-on Trigger Handle (TRG-TC7A-ELEC-01).
Wired Headset	HDST-USBC-PTT1-01	PTT headset with USB-C connector; 1-piece solution. For Push-To-Talk (PTT) applications with volume and PTT buttons. Mono headset with microphone.
HS3100 OTH Bluetooth Headset	HS3100-OTH	HS3100 Rugged Bluetooth Headset Over-The-Head Headband. Includes HS3100 Boom Module and HSX100 OTH Headband Module.
HS3100 BTN-L Bluetooth Headset	HS3100-BTN-L	HS3100 Rugged Bluetooth Headset (Behind-the-neck headband left).
HS3100 OTH-SB Bluetooth Headset	HS3100-OTH-SB	HS3100 Rugged Bluetooth Headset (Over-the-head headband) includes HS3100 Shortened Boom Module and HSX100 OTH headband module.
HS3100 BTN-LSB Bluetooth Headset	HS3100-BTN-LSB	HS3100 Rugged Bluetooth Headset (Behind-the-neck headband left) includes HS3100 Shortened Boom Module and HSX100 BTN headband module.
HS3100 Bluetooth Boom Module	HS3100-SBOOM-01	HS3100 Shortened Boom Module (includes microphone boom, battery and wind screen).

Main Battery Charging

The device's Charging/Notification LED indicates the status of the battery charging in the device. See Charging Indicators for device charging status. The battery charges from fully depleted to 70% in approximately 45 minutes.

NOTE: In many cases the 90% charge provides plenty of charge for daily use. A full 100% charge lasts for approximately 8 to 14 hours, depending on use case.

To achieve fast charging results use only Zebra charging accessories and batteries. Charge batteries at room temperature with the device in sleep mode.

Charging the Spare Battery

This section provides information on charging a spare battery. Use only Zebra charging accessories and batteries to achieve optimal charging results.

1. Insert a spare battery into the spare battery slot.

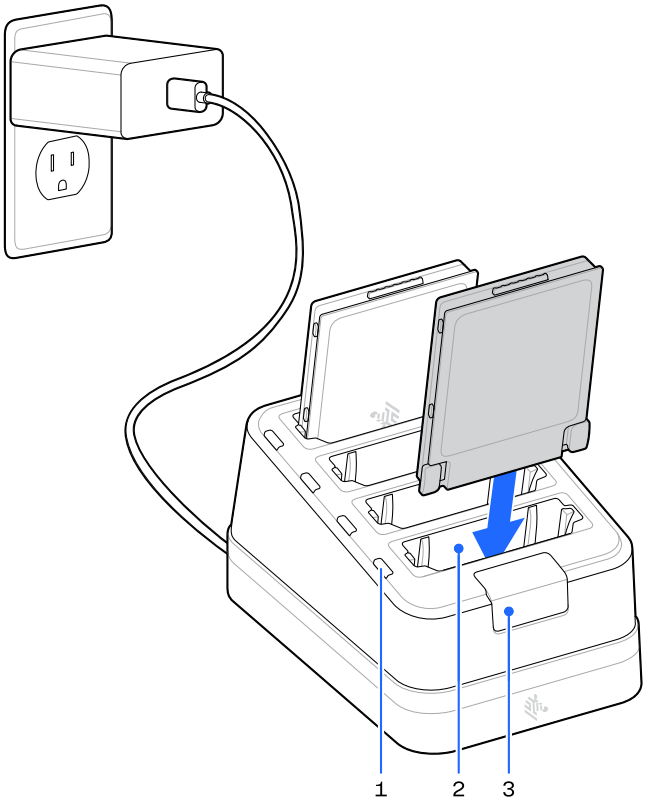

2. Ensure the battery is seated properly.

The battery charges from fully depleted to 90% in approximately 4 hours. In many cases, the 90% charge provides enough for daily use. Depending on the usage profile, a full 100% charge may last approximately 14 hours.

Charging Temperature

Charge batteries in temperatures from 5°C to 40°C (41°F to 104°F). The device or cradle always performs battery charging in a safe and intelligent manner. At higher temperatures, the device or cradle may, for brief periods, alternately enable and disable battery charging to maintain the battery at an acceptable temperature. The device and cradle indicate when charging is disabled due to abnormal temperatures via the LED.

Inserting a TC701 Shim into a Cradle

Each cradle cup has a shim that can be inserted before inserting the device. Shims allow for devices without the rugged boot to charge in a cradle.

1. To install the shim, insert the shim straight down into the cradle cup until it clicks in place.

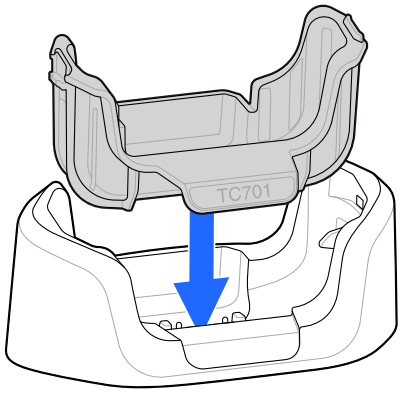

2. To remove the shim, pinch both sides in and pull up.

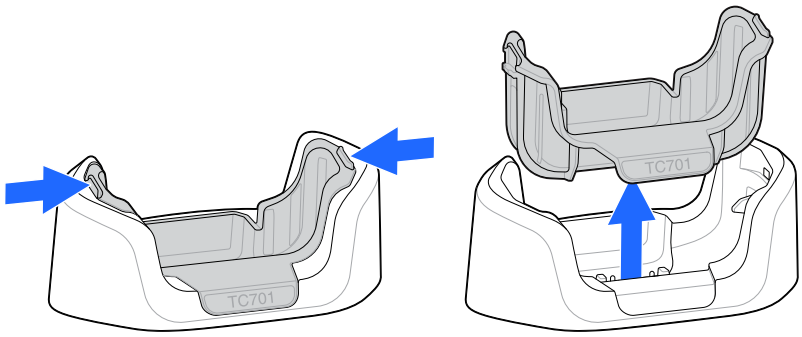

1-Slot Fast-Charging Cradle

This section shows the 1-Slot Fast-Charging Cradle.

CAUTION: Ensure that you follow the guidelines for battery safety described in Battery Safety Guidelines.

Figure 32 1-Slot Fast-Charging Cradle

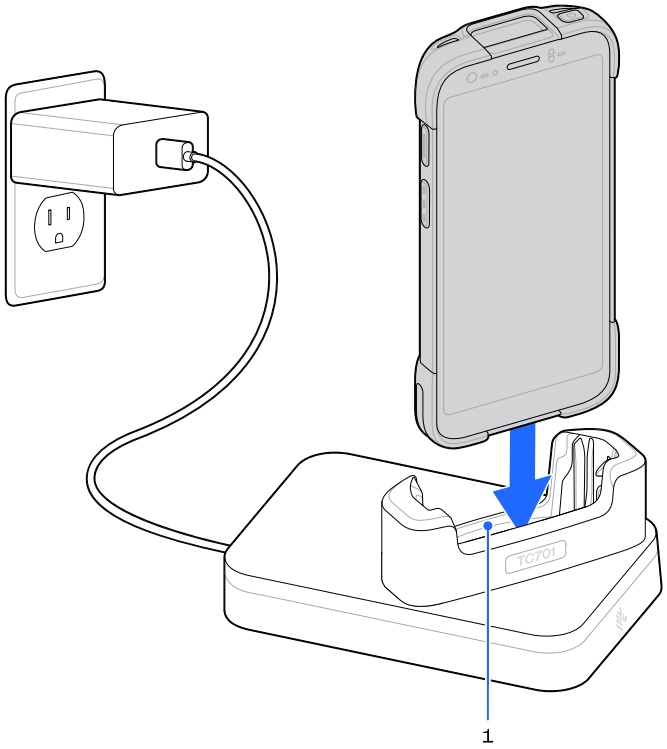

1	Device Slot

NOTE: Insert the device properly in the slot to charge it.

Setting Up the 1-Slot Fast-Charging Cradle

This section demonstrates how to set up the 1-Slot Fast-Charging Cradle.

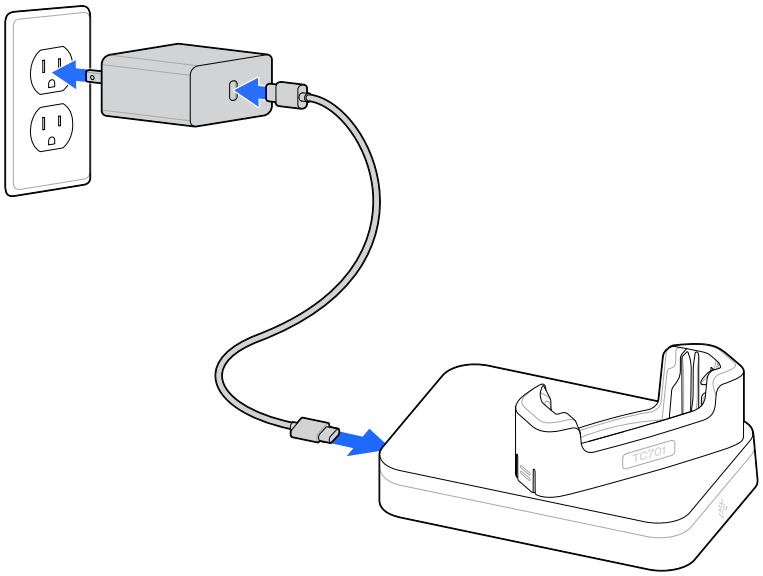

1-Slot Ethernet Charging Cradle

This section shows the 1-Slot Ethernet Charging Cradle.

CAUTION: Ensure that you follow the guidelines for battery safety described in Battery Safety Guidelines.

Figure 33 1-Slot Ethernet Charging Cradle

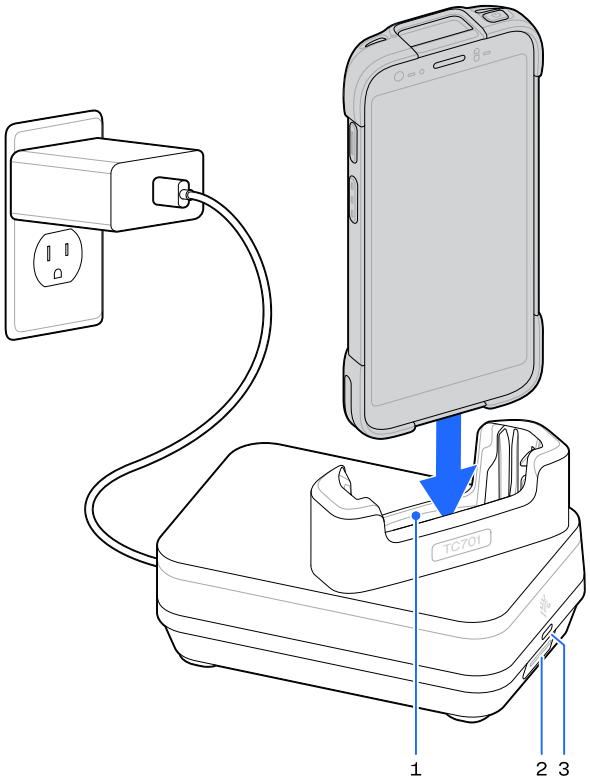

1	Device Slot
2	Cradle Cup Release Button
3	Power LED

NOTE: Insert the device properly in the slot to charge it.

Setting Up the 1-Slot Ethernet Charging Cradle

This section demonstrates how to set up the 1-Slot Ethernet Charging Cradle.

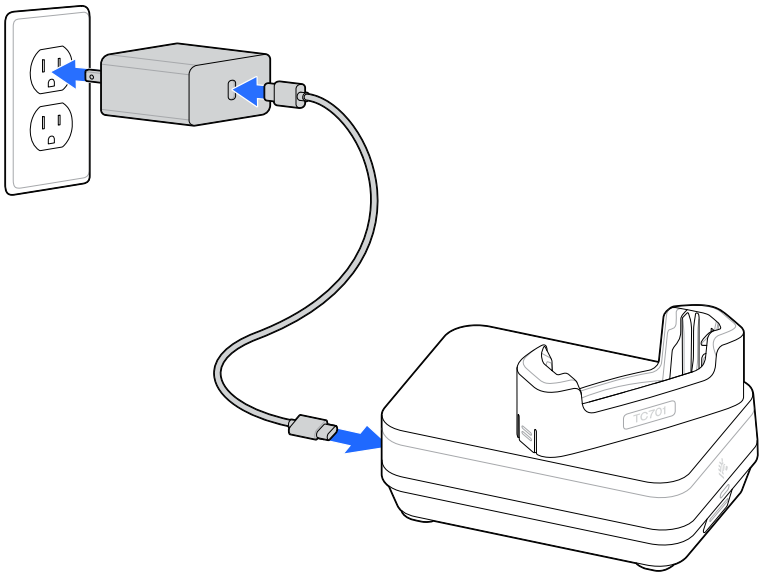

Ethernet Communication

The 5-Slot Ethernet Cradle provides Ethernet communication with a network.

LED Indicators

One green LED light on the front of the cradle that blinks to indicate the data transfer rate.

Table 32 LED Data Rate Indicators

Data Rate	1000 LED	100/10 LED
1 Gbps	On/Blink	Off
100 Mbps	Off	On/Blink
10 Mbps	Off	On/Blink

Establishing Ethernet Connection

This section describes the method for enabling an Ethernet connection.

1. Go to **Settings**.
2. Touch **Network & internet** > **Ethernet**.
3. Slide the Ethernet switch to the **ON** position.
4. Insert the device into a slot.

   The icon displays in the Status bar.

5. Touch **Eth0** to view Ethernet connection details.

Configuring Ethernet Proxy Setting

This device includes Ethernet cradle drivers. After inserting the device, configure the Ethernet connection.

1. Go to **Settings**.
2. Touch **Network & internet** > **Ethernet**.
3. Slide the switch to the **ON** position.
4. Place the device into the Ethernet cradle slot.
5. Touch and hold **eth0** until the menu displays.
6. Touch **Modify Proxy**.
7. Touch the **Proxy** list and select **Manual**.
8. In the **Proxy hostname** field, enter the proxy server address.
9. In the **Proxy port** field, enter the proxy server port number.
10. In the **Bypass proxy for** field, enter addresses for websites that do not require to go through the proxy server.

NOTE: Do not use spaces or carriage returns between addresses when entering proxy addresses in the **Bypass proxy for** field.

11. Use the separator "|" between addresses.
12. Touch **MODIFY**.
13. Touch the Home button.

Configuring Ethernet Static IP Address

This device includes Ethernet cradle drivers. After inserting the device, configure the Ethernet connection.

1. Go to **Settings**.
2. Touch **Network & internet** > **Ethernet**.
3. Slide the switch to the **ON** position.
4. Place the device into the Ethernet cradle slot.
5. Touch **eth0**.
6. Touch **Disconnect**.
7. Touch **eth0**.
8. Touch the **IP** settings list and select **Static**.
9. In the **IP address** field, enter the proxy server address.
10. If required, in the **Gateway** field, enter a gateway address for the device.
11. If required, in the **Netmask** field, enter the network mask address.
12. If required, in the **DNS** address fields, enter a Domain Name System (DNS) addresses.
13. Touch **CONNECT**.

14. Touch the Home button.

1-Slot 2-Device Charging Cradle

This section shows the 1-Slot 2-Device Charging Cradle.

CAUTION: Ensure that you follow the guidelines for battery safety described in Battery Safety Guidelines.

Figure 34 1-Slot 2-Device Charging Cradle

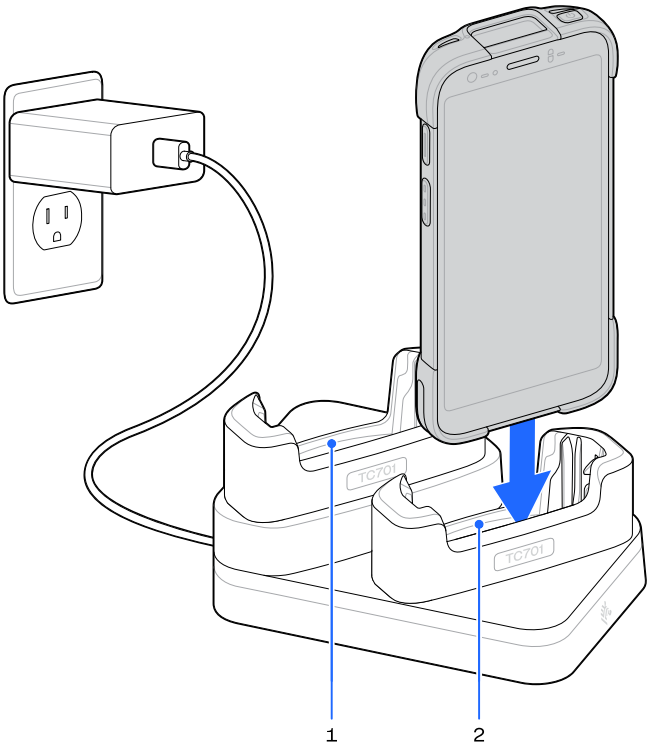

1	Device Slot
2	Device Slot

NOTE: Insert the device properly in the slot to charge it.

Setting Up the 1-Slot 2-Device Charging Cradle

This section demonstrates how to set up the 1-Slot 2-Device Charging Cradle.

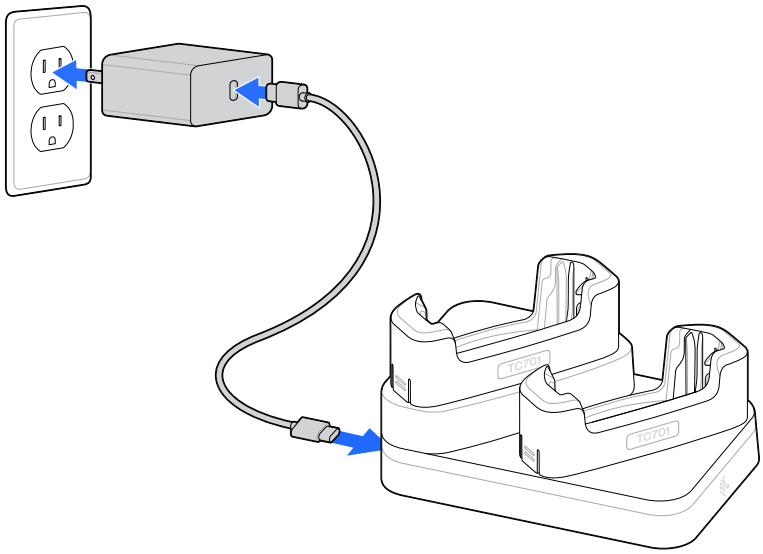

1-Slot Device and Spare Battery Charging Cradle

This section shows the 1-Slot Device and Spare Battery Charging Cradle.

CAUTION: Ensure that you follow the guidelines for battery safety described in Battery Safety Guidelines.

Figure 35 1-Slot Device and Spare Battery Charging Cradle

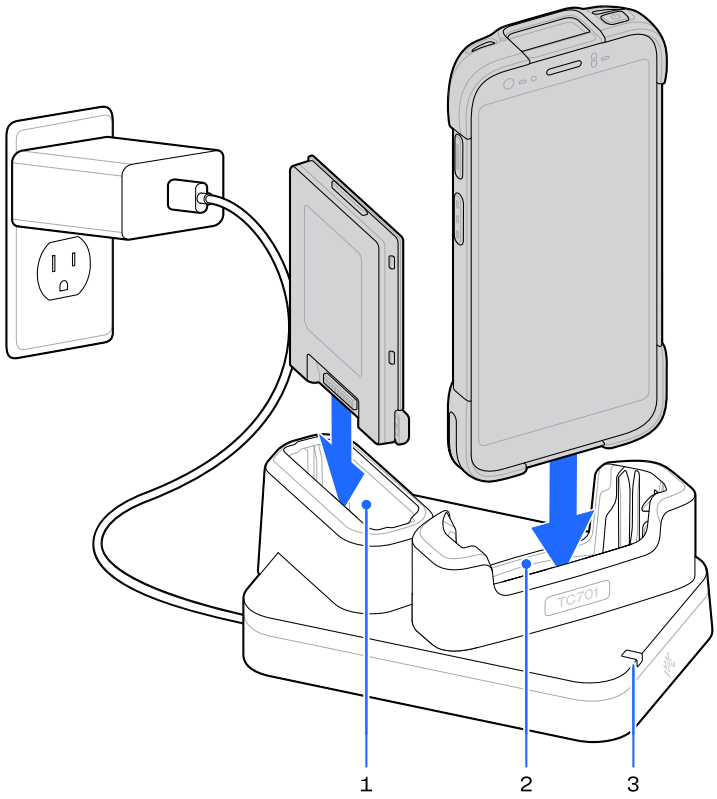

1	Spare Battery Slot
2	Device Slot
3	Spare Battery Charging LED

NOTE: Insert the device and battery properly in the slot to charge it.

Setting Up the 1-Slot Device and Spare Battery Charging Cradle

This section demonstrates how to set up the 1-Slot Device and Spare Battery Charging Cradle.

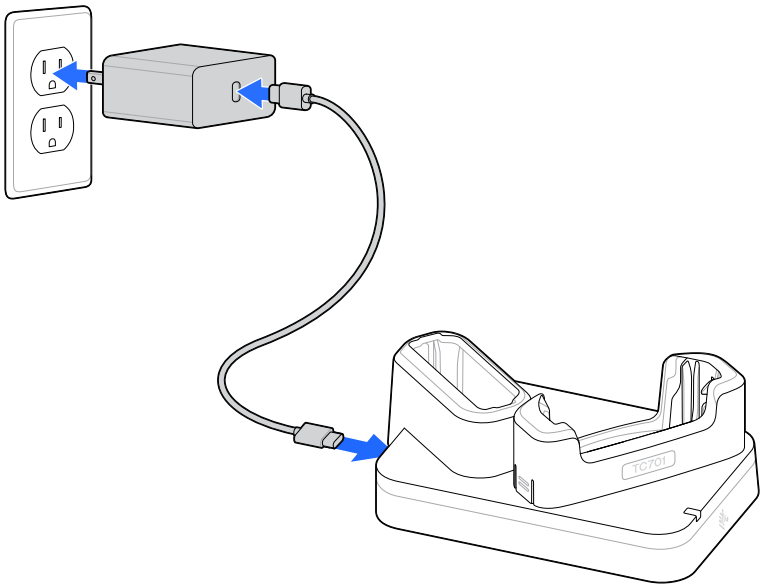

1-Slot Device and Spare Battery Ethernet Charging Cradle

This section shows the 1-Slot Device and Spare Battery Ethernet Charging Cradle.

CAUTION: Ensure that you follow the guidelines for battery safety described in Battery Safety Guidelines.

Figure 36 1-Slot Device and Spare Battery Ethernet Charging Cradle

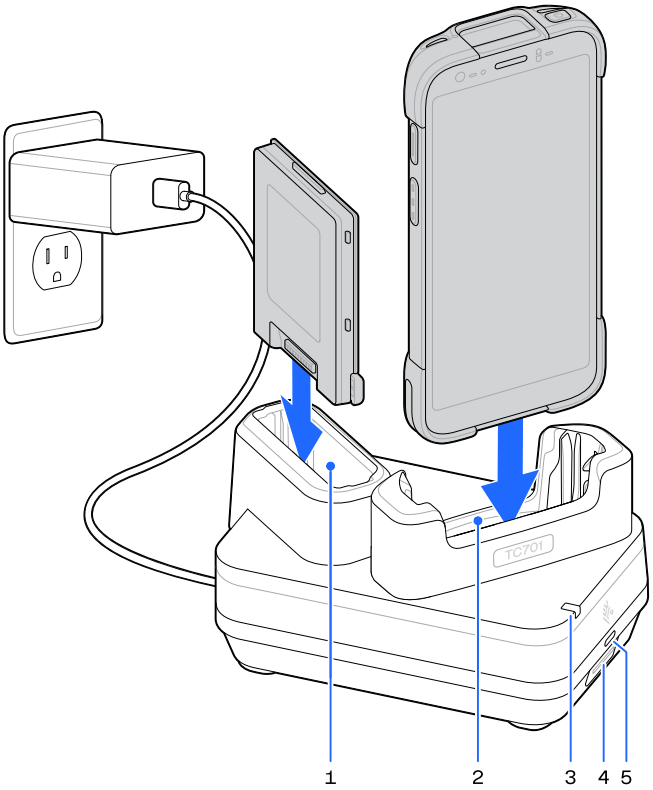

1	Spare Battery Slot
2	Device Slot
3	Spare Battery Charging LED
4	Cradle Cup Release Button
5	Power LED

NOTE: Insert the device and battery properly in the slot to charge it.

Setting Up the 1-Slot Device and Spare Battery Ethernet Charging Cradle

This section demonstrates how to set up the 1-Slot Device and Spare Battery Ethernet Charging Cradle.

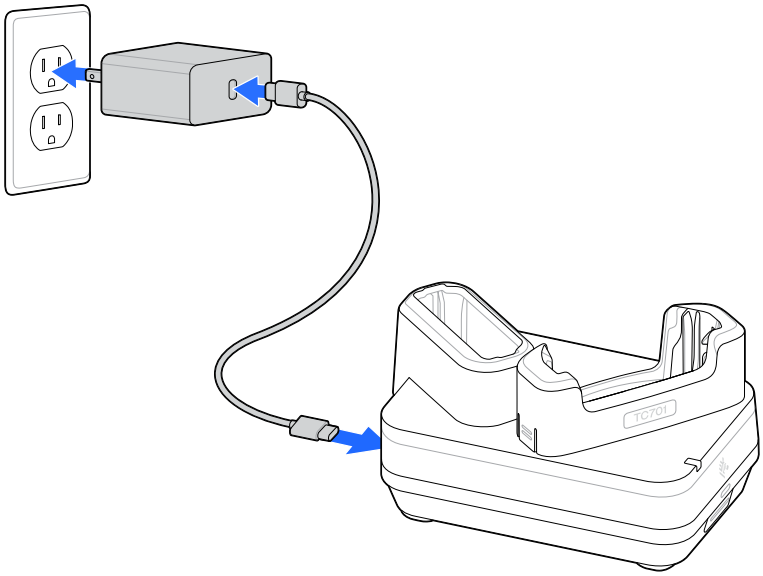

4-Slot Battery Charger

This section describes how to use the 4-Slot Battery Charger to charge up to four device batteries.

CAUTION: Ensure that you follow the guidelines for battery safety described in Battery Safety Guidelines.

Figure 37 4-Slot Battery Charger

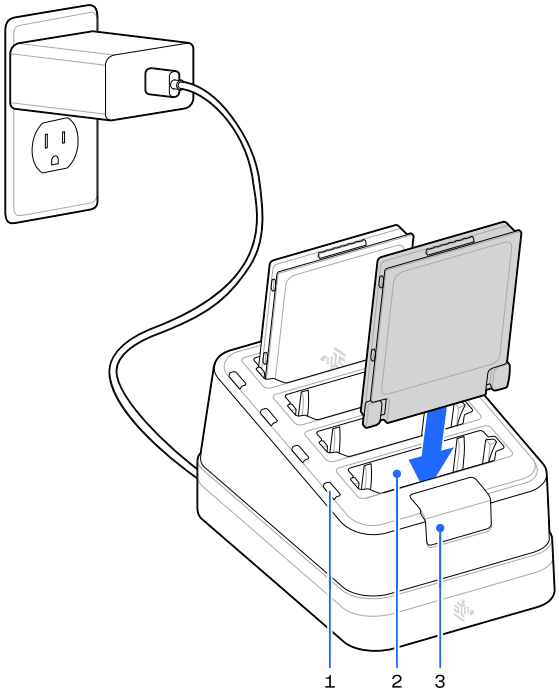

1	Battery Charging LED
2	Battery Slot
3	Firmware Update Port

NOTE: Insert the battery properly in the slot to charge it.

5-Slot Fast-Charging Cradle

This section shows the 5-Slot Fast-Charging Cradle.

CAUTION: Ensure that you follow the guidelines for battery safety described in Battery Safety Guidelines.

Figure 38 5-Slot Fast-Charging Cradle

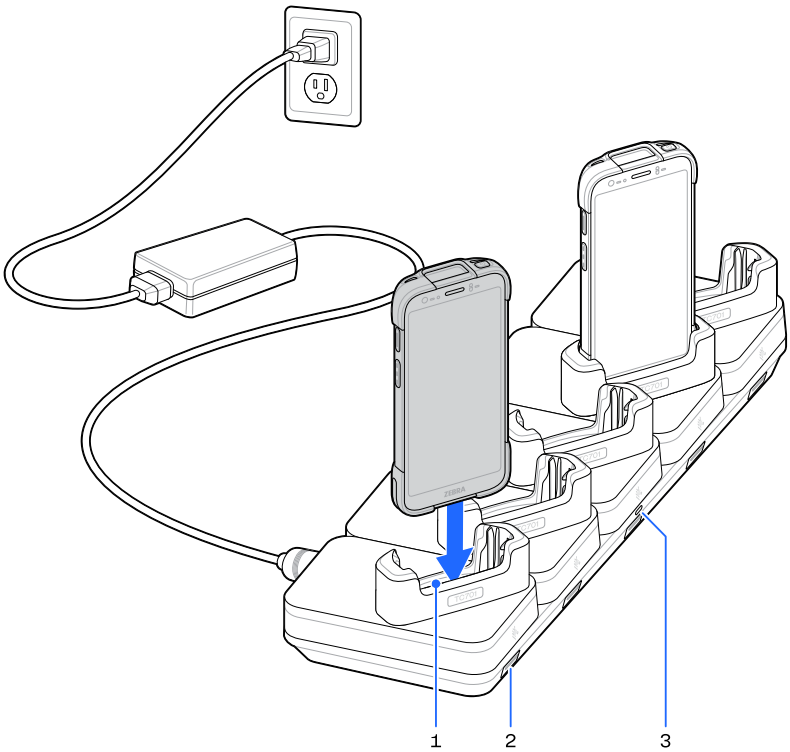

1	Device Slot
2	Cradle Cup Release Button
3	Power LED

NOTE: Insert the device properly in the slot to charge it.

Setting Up the 5-Slot Fast-Charging Cradle

This section demonstrates how to set up the 5-Slot Fast-Charging Cradle.

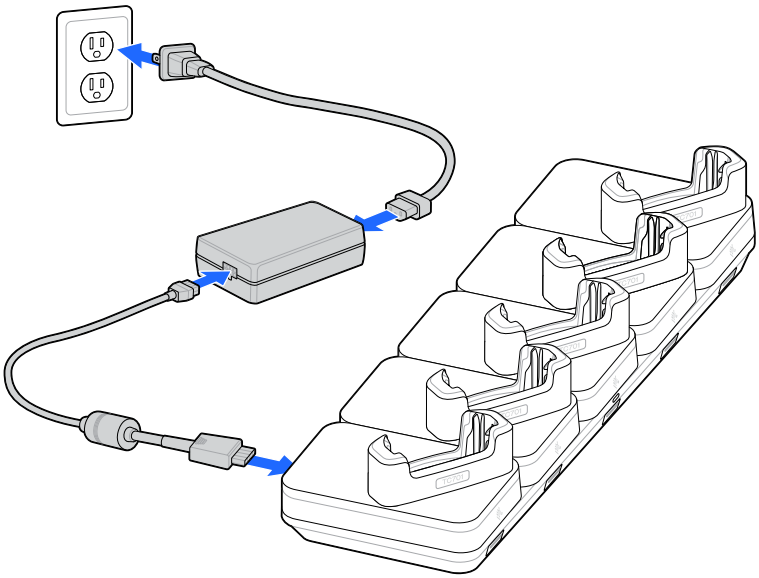

5-Slot Ethernet Charging Cradle

This section shows the 5-Slot Ethernet Charging Cradle.

CAUTION: Ensure that you follow the guidelines for battery safety described in Battery Safety Guidelines.

Figure 39 5-Slot Ethernet Charging Cradle

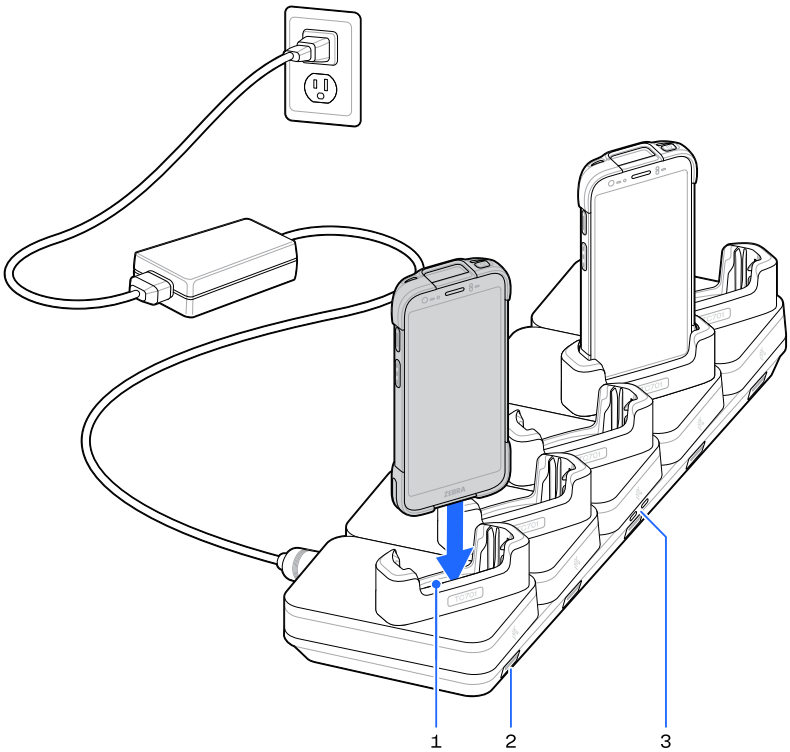

1	Device Slot
2	Cradle Cup Release Button
3	Power LED

NOTE: Insert the device properly in the slot to charge it.

Setting Up the 5-Slot Ethernet Charging Cradle

This section demonstrates how to set up the 5-Slot Ethernet Charging Cradle.

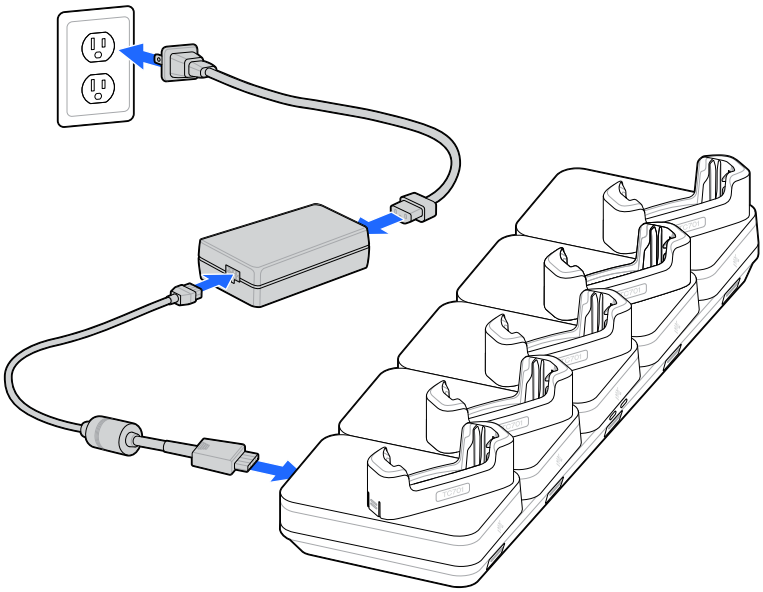

5-Slot Charging Cradle for Devices and Spare Batteries

This section shows the 5-Slot Charging Cradle for Devices and Spare Batteries.

CAUTION: Ensure that you follow the guidelines for battery safety described in Battery Safety Guidelines.

Figure 40 5-Slot Charging Cradle for Devices and Spare Batteries

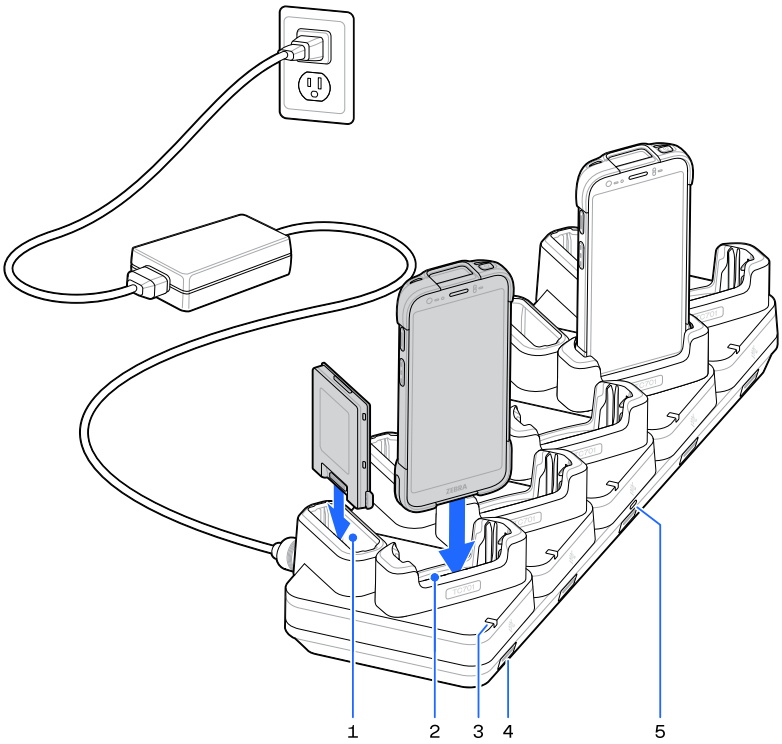

1	Spare Battery Slot
2	Device Slot
3	Spare Battery Charging LED
4	Cradle Cup Release Button
5	Power LED

NOTE: Insert the device and battery properly in the slot to charge it.

Setting Up the 5-Slot Device and Spare Battery Charging Cradle

This section demonstrates how to set up the 5-Slot Device and Spare Battery Charging Cradle.

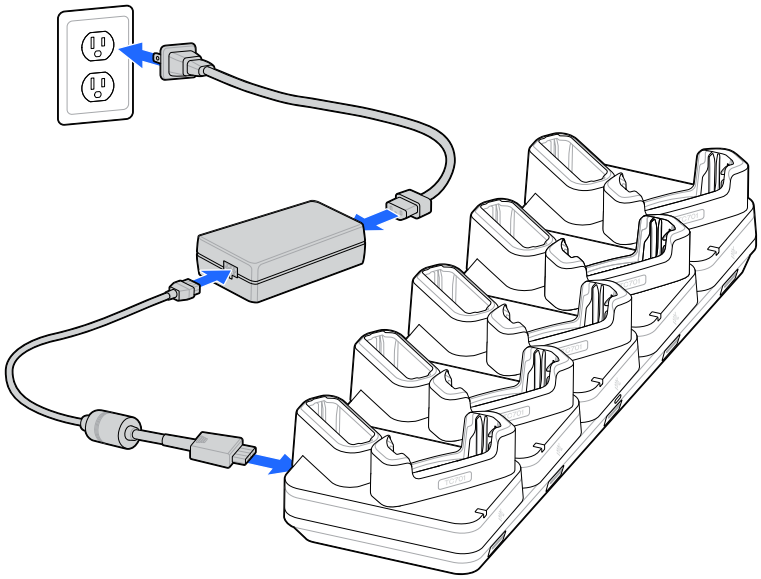

5-Slot 10-Devices Charging Cradle

This section shows the 5-Slot 10-Devices Charging Cradle.

CAUTION: Ensure that you follow the guidelines for battery safety described in Battery Safety Guidelines.

Figure 41 5-Slot 10-Devices Charging Cradle

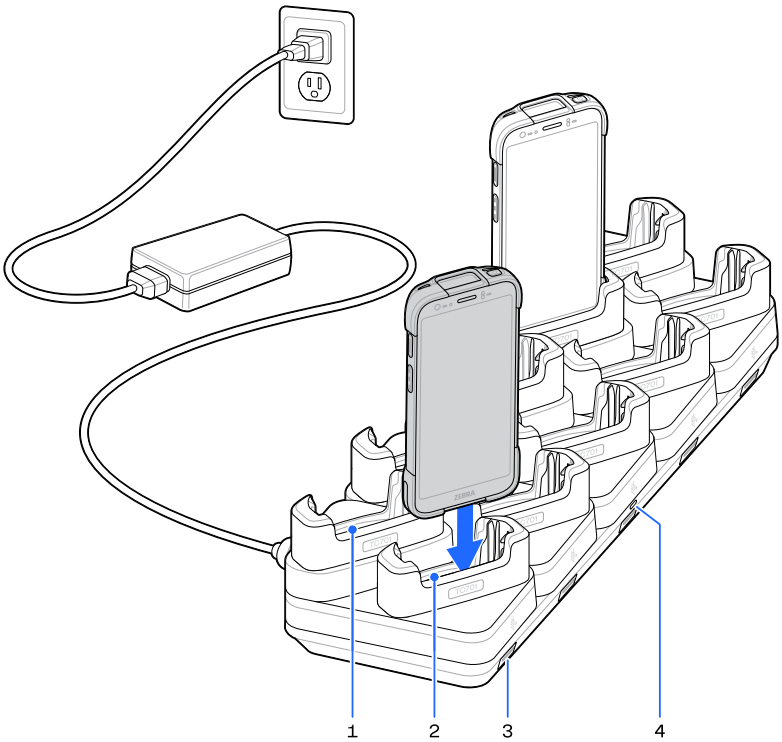

1	Spare Battery Slot
2	Device Slot
3	Cradle Cup Release Button
4	Power LED

NOTE: Insert the device properly in the slot to charge it.

Setting Up the 5-Slot 10-Devices Charging Cradle

This section demonstrates how to set up the 5-Slot 10-Devices Charging Cradle.

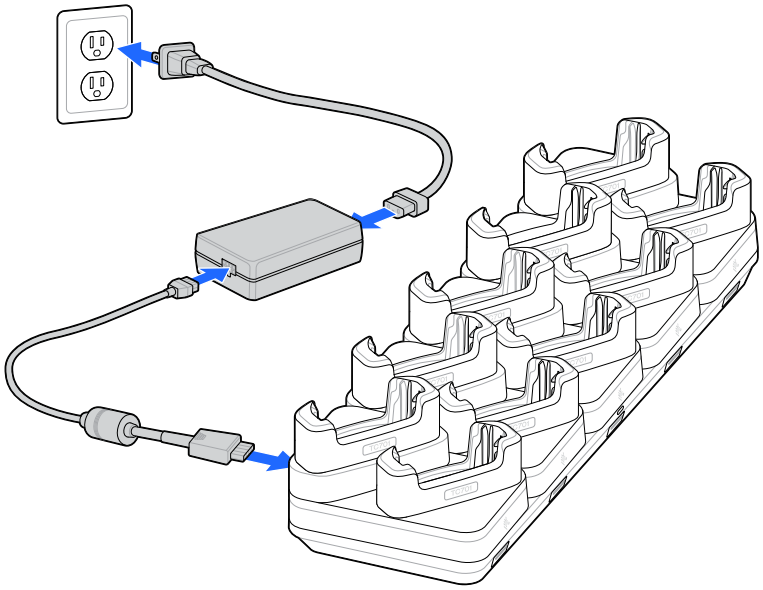

Charge/USB-C Cable

The Charge/USB-C cable is used to charge the device's battery and to facilitate data transfer between the device and a host computer.

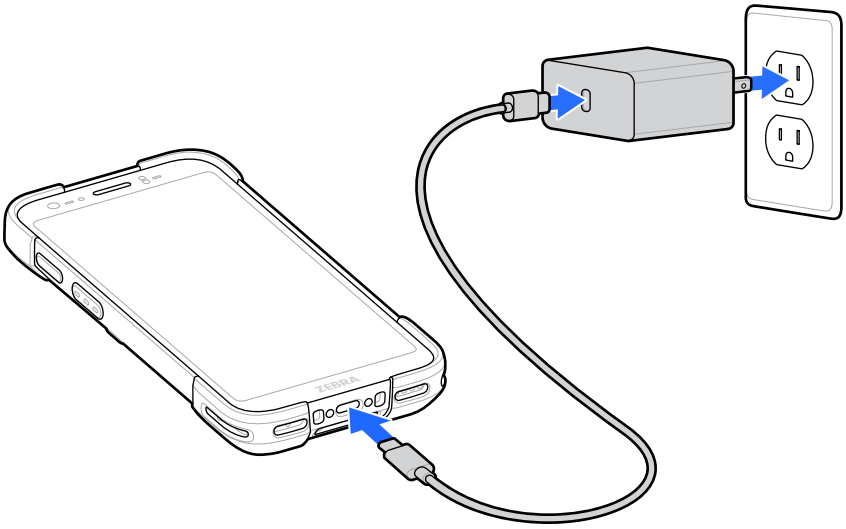

Connecting to a Host Computer

Establish a direct USB connection between the mobile computer and a host computer to facilitate file transfers, application development, and device management.

Use a direct USB connection to transfer files and data between the device and a host computer. This connection is essential for various tasks, including deploying applications using Android Debug

Bridge (ADB), accessing the device's internal storage, and troubleshooting. The USB connection also simultaneously charges the device's main battery.

1. Connect the Charge/USB-C Cable to the device.
2. Connect the USB connector of the cable to a host computer.

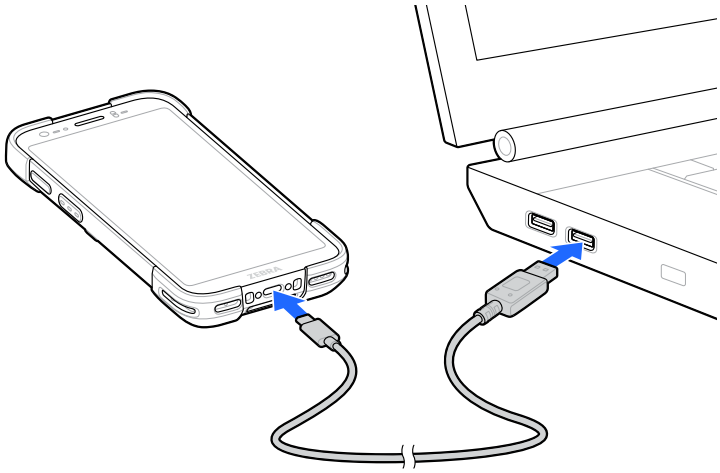

Charging the Device

This section provides information for charging the device.

1. To charge the main battery, connect the charging accessory to the appropriate power source.
2. Insert the device into a cradle or attach to a cable. The device turns on and begins charging. The Charging/Notification LED blinks amber while charging, then turns solid green when fully charged.

The device's Charging/Notification LED indicates the status of the battery charging in the device. The battery charges from fully depleted to 70% in approximately 45 minutes. To achieve the optimal charging results, use only Zebra charging accessories and batteries. Charge batteries at room temperature with the device in sleep mode.

Hand Strap

Attach the Basic Hand Strap to the device for improved handling.

Attaching the Hand Strap

This section describes the method for attaching the hand strap.

NOTE: The optional stylus must be installed on the hand strap before the hand strap is installed on the device. Go to Stylus and Tether with Hand Strap Installation for instructions on installing the optional stylus.

Clip the hand strap onto the device's accessory attachment points.

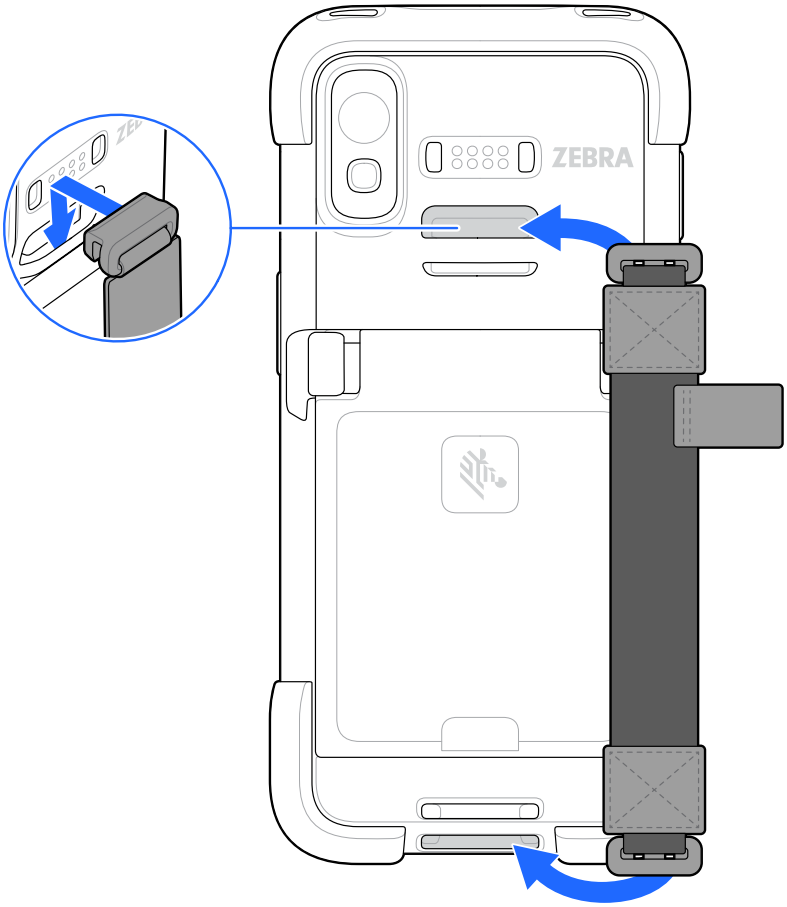

Removing the Hand Strap

This section describes the method for removing the hand strap.

1. Place your thumb on the top of the hand strap (below the top clip) and index finger underneath the top of the hand strap, and pull the top clip up and off the hand strap bar.
2. Remove the bottom clip by placing both thumbs on the clip and pushing down to unclip.

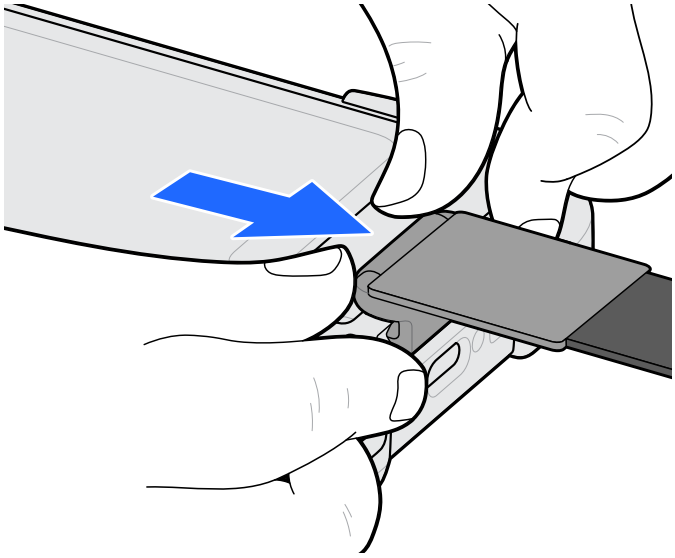

Stylus and Tether

The optional Stylus pen lets you write, draw, or take notes on the device. Learn how to install the stylus/tether on the device.

Stylus and Tether Installation

This section describes how to install the stylus and tether.

1. Insert one of the loop ends of the tether through the hole in the stylus.

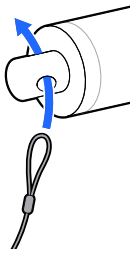

2. Feed the tether through the loop.

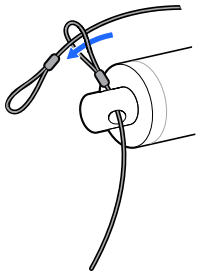

3. Pull the tether until the loop tightens.
4. Insert the tether loop under the device hand strap bar.

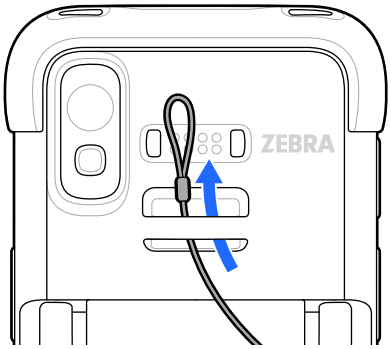

5. Feed the stylus through the loop.

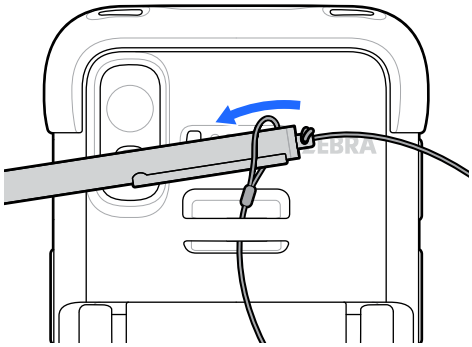

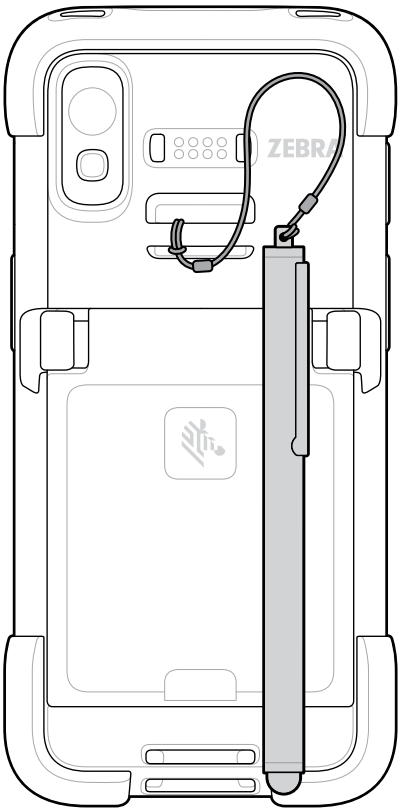

Stylus and Tether with Hand Strap Installation

This section describes how to install the stylus and tether with the hand strap.

1. Insert one of the loop ends of the tether through the hole in the stylus.

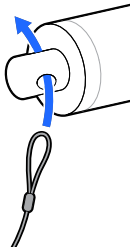

2. Feed the tether through the loop.

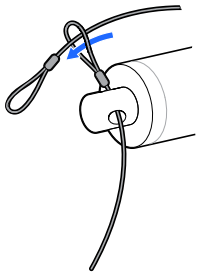

3.
4. Pull the tether until the loop tightens.
5. Insert the loop into the top-hand strap clip.

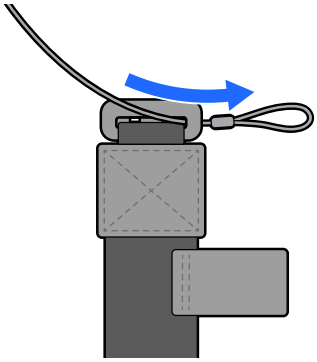

6. Feed the stylus attached to the tether through the tether loop and tighten.

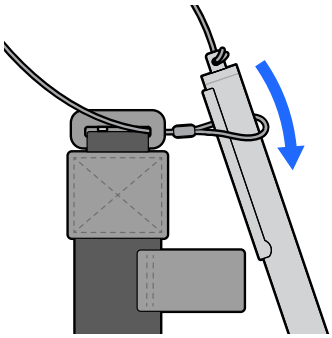

7. Attach the hand strap to the device. Go to Attaching the Hand Strap for instructions on attaching the hand strap to the device.
8. Insert the stylus into the stylus holder on the hand strap when not in use.

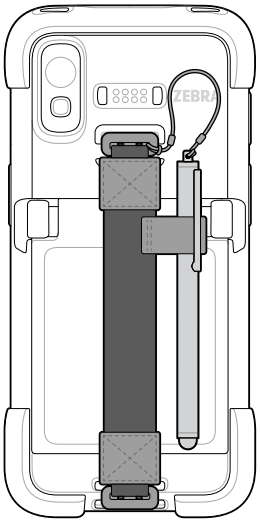

Trigger Handle

The Trigger Handle adds a gun-style handle with a scanning trigger to the device. It increases comfort when using the device in scan-intensive applications for extended periods of time.

NOTE: If you are using UWC or iTOF with the Trigger Handle, there will be noticeable clipping on any photo captures.

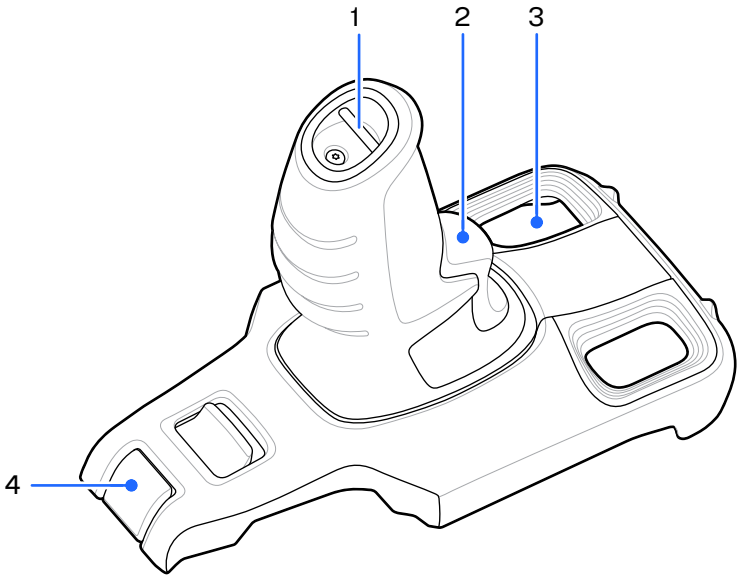

1	Trigger
2	Lanyard mount

3	Camera window
4	Release latch

Installing the Optional Lanyard

This section describes how to install the optional lanyard onto the trigger handle.

1. Insert the loop end of the tether into the slot on the bottom of the device handle and feed the lanyard through the loop.

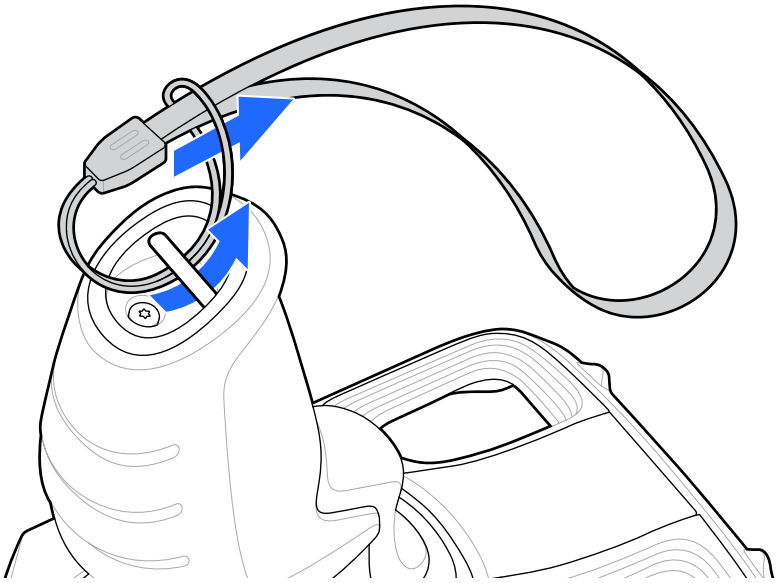

2. Pull the lanyard until the loop tightens.

Inserting the Device into the Trigger Handle

This section describes how to insert the device into the trigger handle.

1. Align the top of the device with the top of the trigger handle.
2. Rotate and press down on the device until it snaps into place.

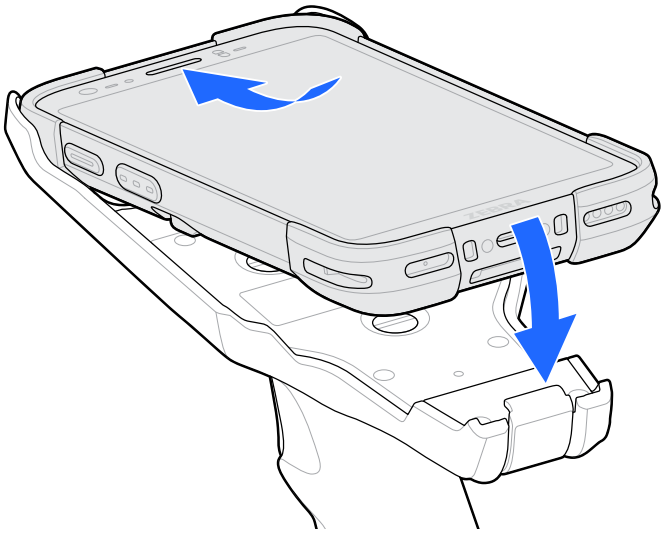

Removing the Device from the Trigger Handle

This section describes how to remove the device from the trigger handle.

1. Place one hand around the Trigger Handle while holding the device with the other hand.
2. Push up the trigger handle release latch with your thumb, and then rotate the device away and out of the trigger handle.

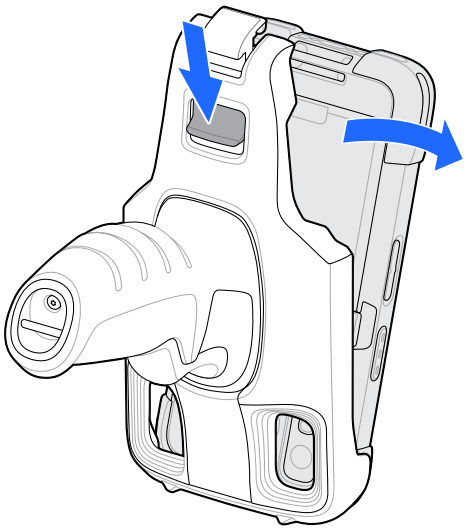

5-Slot Cradle Bracket Installation

Use the Rack/Wall Mount Bracket to mount a 5-slot cradle on a rack. When installing on a rack, assemble the bracket and cradles/chargers and then install the assembly on the rack.

1. Place the power supply in the bottom tray.
2. Connect the AC line cord to the power supply.

3. Connect the DC line cord to the power supply.
4. Secure the power supply and cables to the bottom tray with tie wraps.

NOTE: Ensure that the tie wrap buckle is on the side of the power supply and not on top. The tie wrap buckle on top of the power supply interferes with the top tray.

5. Route cables through the cable slots.

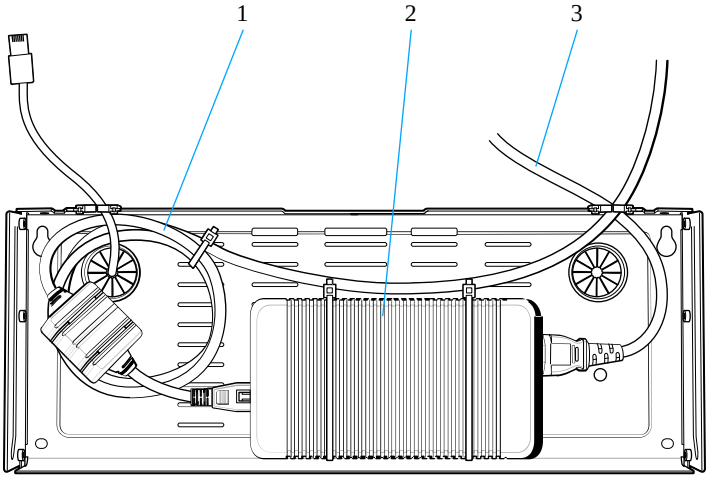

1	DC line cord
2	Power supply
3	AC line cord

6. Secure four M2.5 studs to the top tray as shown.

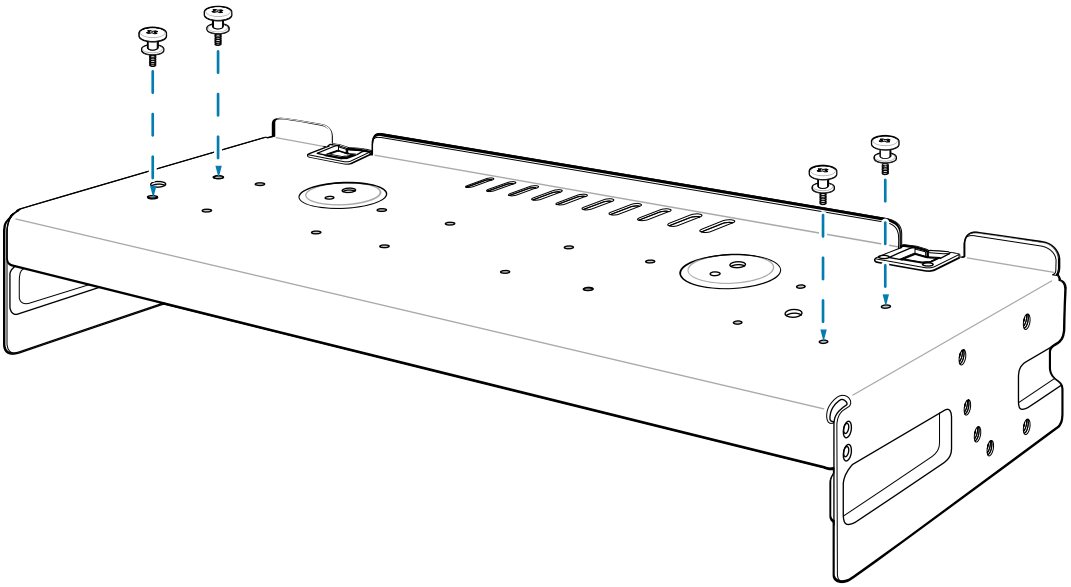

7. Align and install a 5-Slot cradle onto the studs of the top tray.

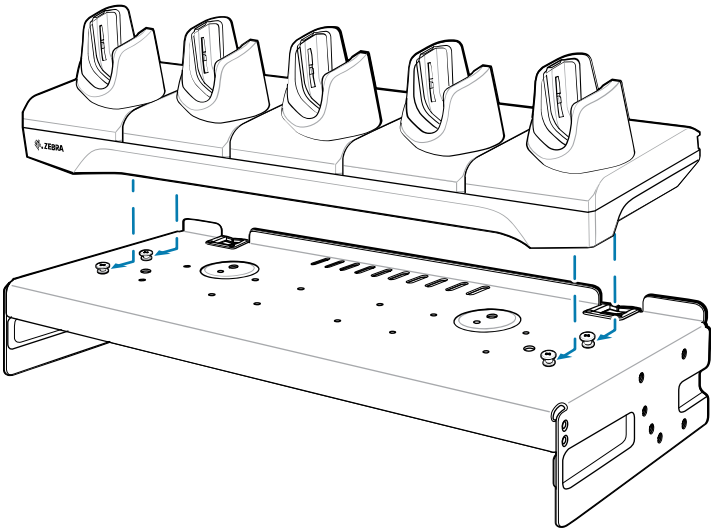

8. Secure cradle to top tray with two M2.5 safety screws.

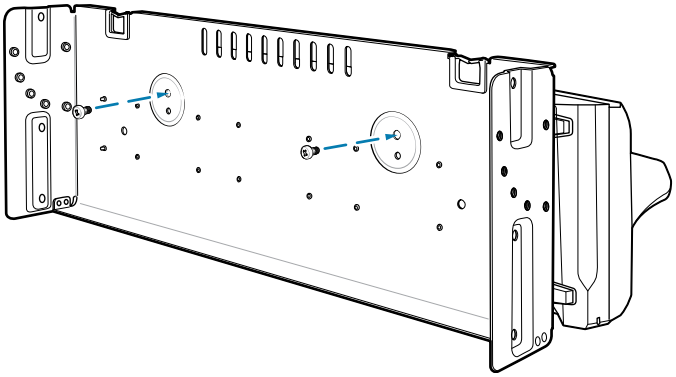

9. Slide the top tray onto the bottom tray.

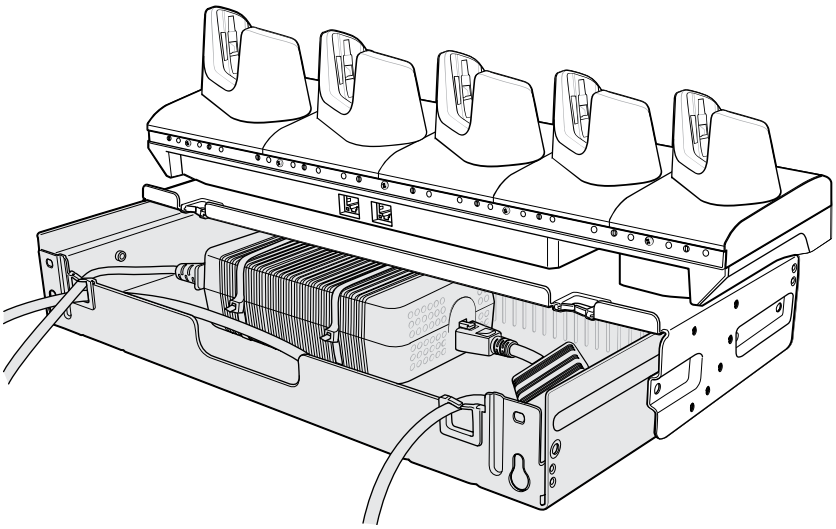

10. Connect cables to cradle.

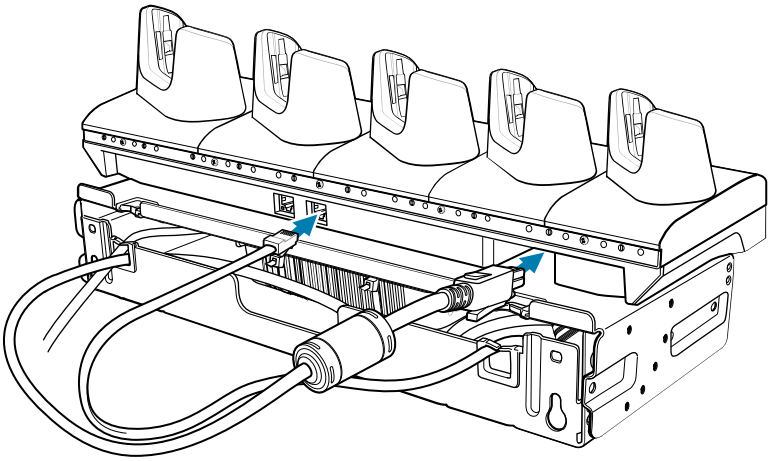

11. Secure the top tray to the bottom tray with 4 M5 screws (two on each side).

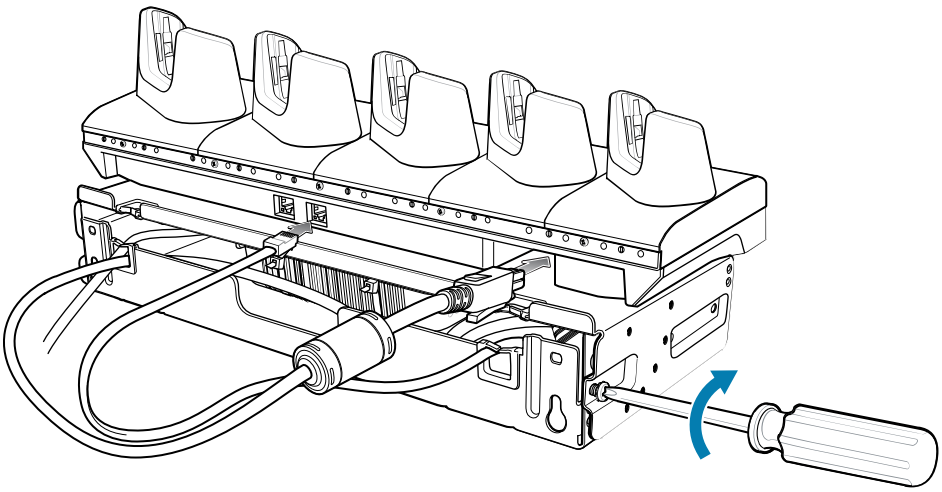

Installing the 5-Slot Cradle on a Rack

This section describes the method for installing the 5-Slot cradle onto a rack.

NOTE: Ensure tie wrap buckle is on side of power supply. Tie wrap buckle on top of power supply interferes with top tray.

1. Place the power supply in bottom tray.
2. Connect AC line cord to power supply.
3. Connect DC line cord to power supply.
4. Secure power supply and cables to bottom tray with tie wraps.
5. Route cables through cable slots.

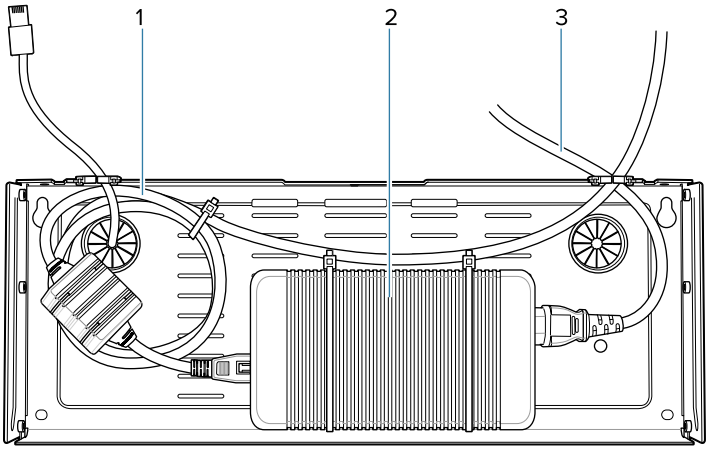

1	DC line cord
2	Power supply
3	AC line cord

6. Secure four M2.5 studs to top tray as shown.

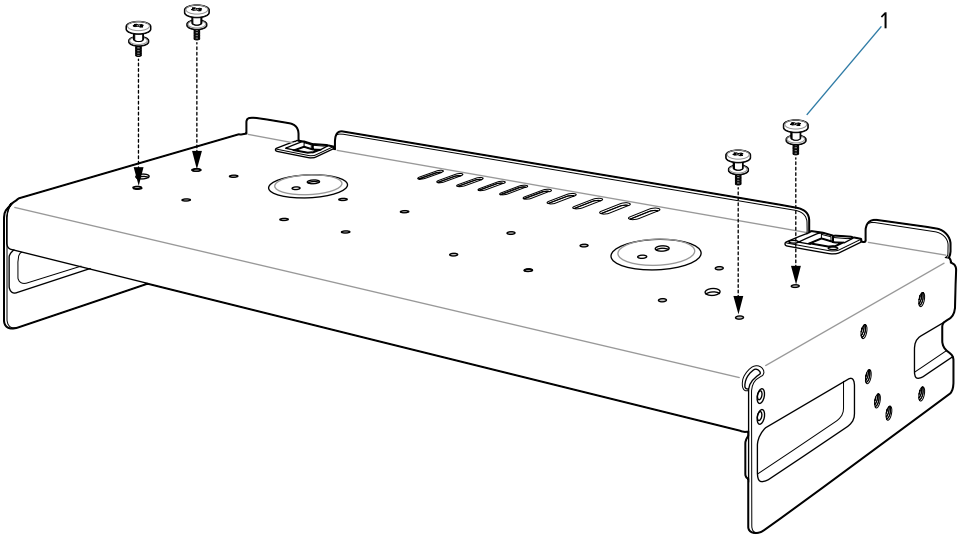

1	Studs (4)

7. Align and install 5-Slot cradle onto studs of top tray.

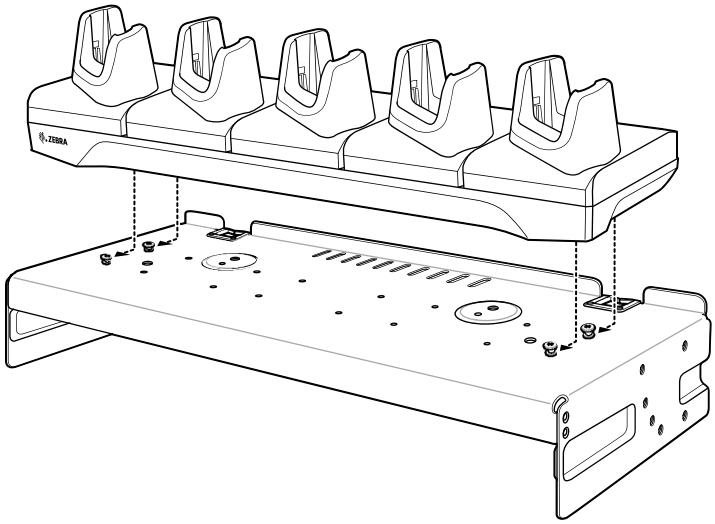

8. Secure cradle to top tray with two M2.5 safety screws.

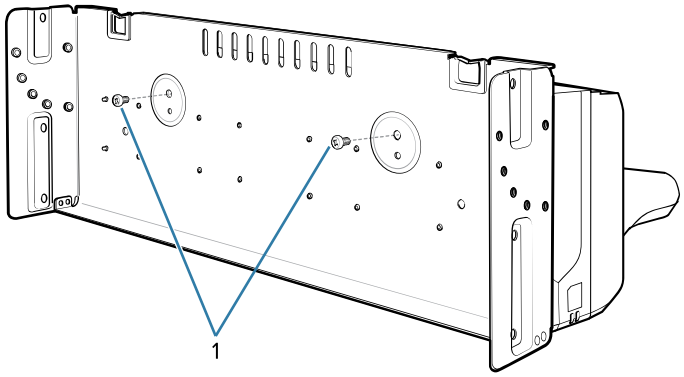

1	Safety Screws(2)

9. Slide top tray onto bottom tray.

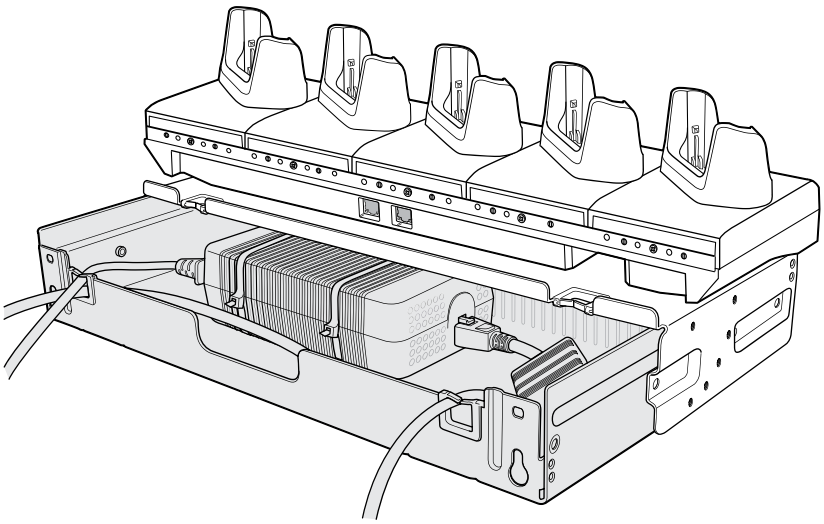

10. Connect cables to cradle.

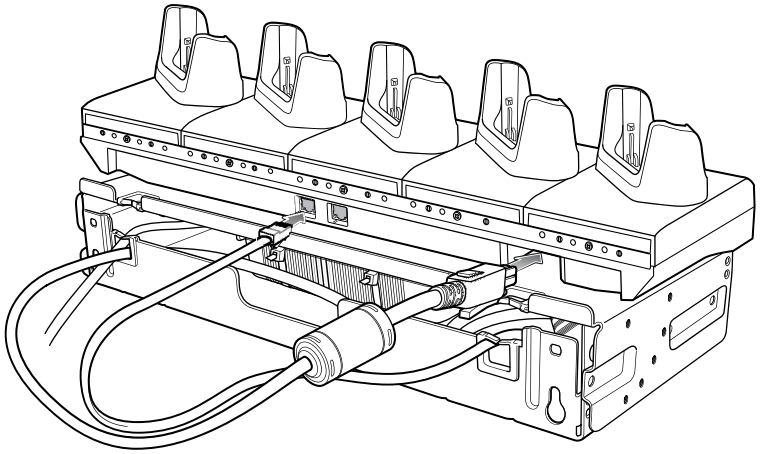

11. Secure top tray to bottom tray with four M5 screws (two on each side).

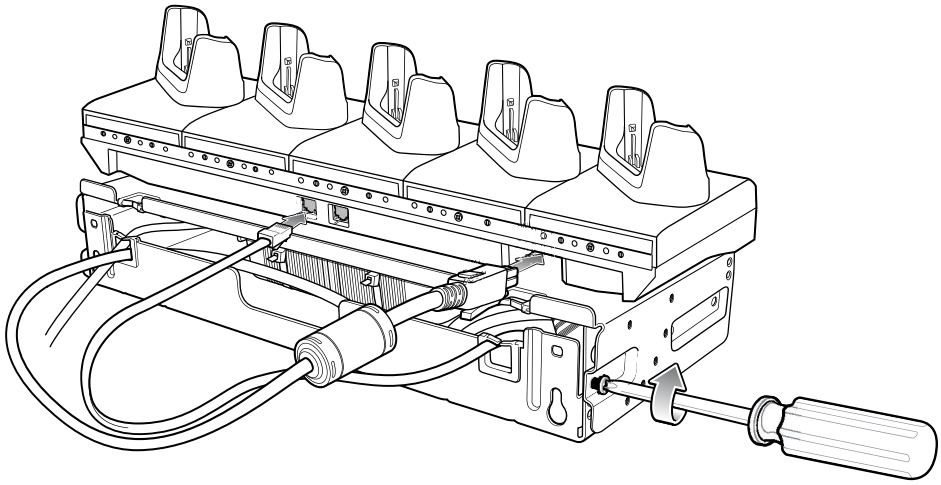

Go to Installing the Rack Mount for installing the bracket assembly onto a rack.

Rack Mount Installation

NOTE: Use screws provided with the rack system. Refer to the rack user documentation for instructions.

IMPORTANT: When installing the rack, ensure that all building codes are followed when connecting the power supplies to an AC power source.

While installing the brackets, power supplies, and cables:

- Use tie wraps to secure cables to the bracket and rails.
- Coil cables wherever possible.
- Route power cables along the rails.
- Route inter-cradle cables to the side rails and then from the rails to the bracket.

- Install mounting brackets at the following maximum heights from the ground:
  - 5-slot cradle: 1.2 m (4 ft)
  - 4-slot battery charger: 0.91 m (3 ft)

1. Secure mounting brackets to both sides of the top tray with four M5 screws (two on each side). For 5-Slot cradles, position the flange for horizontal installation. For 4-Slot battery chargers, position the flange for 25° installation.

Figure 42 Flange Horizontal Position (5-Slot Cradles)

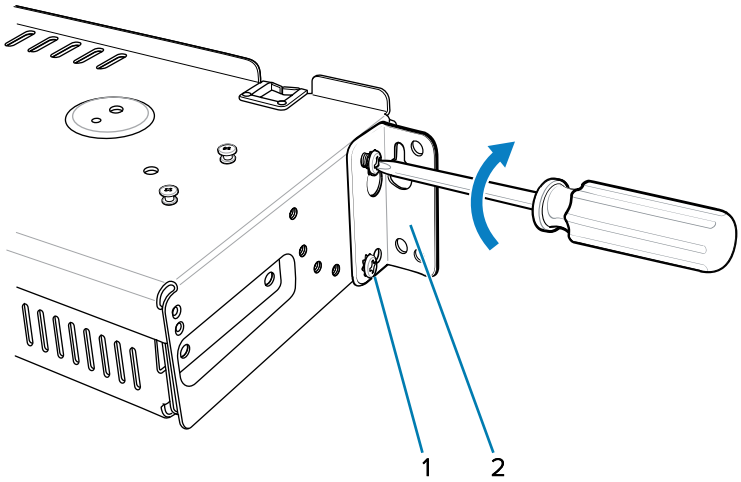

1	Fifth screw hole
2	Flange

Figure 43 Flange 25° Position (4-Slot Battery Chargers)

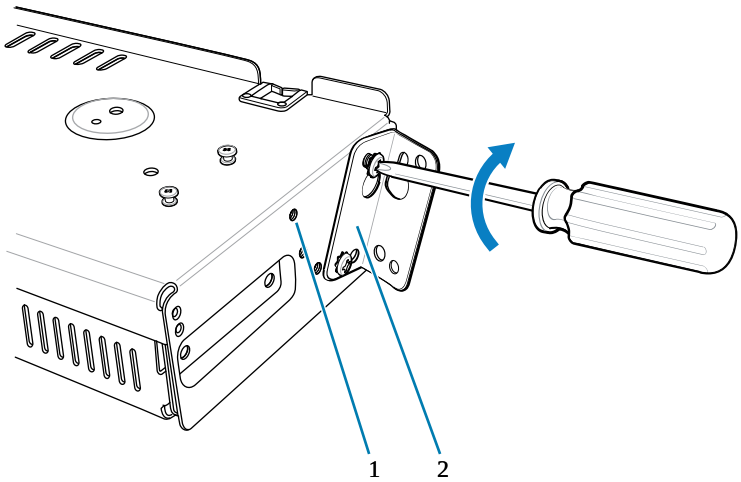

1	Top screw hole
2	Flange

2. Partially install two rack system mounting screws for each mounting bracket to be installed. The screw heads should protrude halfway from the rail.

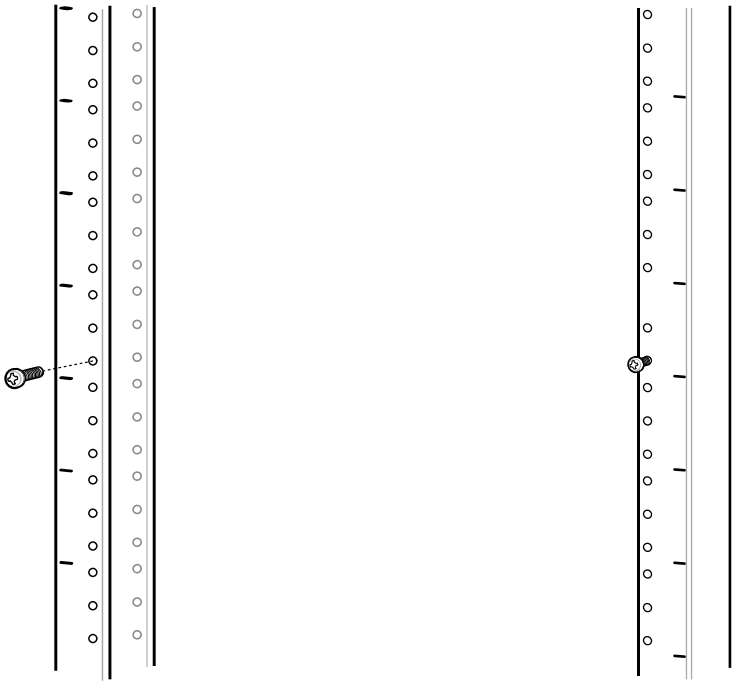

Note the following distances:

- Allow a clearance of at least 7 cm (2.75 in.) between the top of a device and the bottom of the mounting bracket above it.
- Two horizontally mounted brackets should be at least 35.6 cm (14 in.) apart vertically (from the top of one flange to the top of the next flange).
- A horizontally mounted bracket and a 25° mounted bracket should be at least 33.7 cm (16.25 in.) apart vertically (from top of one flange to the top of the next flange).

3. For each mounting bracket, align the bracket's top mounting keyholes with the screws. Place the brackets on the screws.

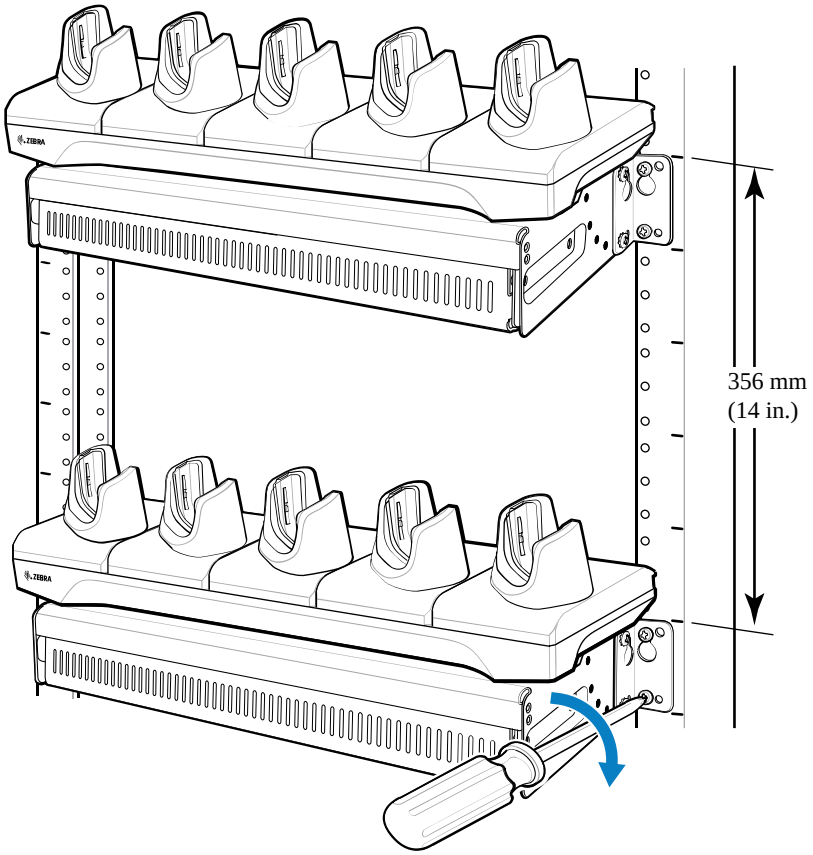

4. Tighten the top screws for each bracket.
5. Install and tighten the bottom screws to fully secure the brackets.
6. Route the cables as appropriate and connect them to a power source.

Wall Installation

Use the Rack/Wall Mount Bracket to mount battery chargers or a cradle to a wall.

IMPORTANT: For proper installation, consult a professional installer. Failure to install the bracket properly could result in damage to the hardware.

When installing the rack/wall mount bracket on a wall:

- First, assemble the bottom tray, install the bottom tray on the wall, and then assemble the top tray.
- Use mounting hardware (screws and/or anchors) appropriate for the type of wall the bracket is mounted on.
  - The Mount Bracket mounting slot dimensions are 5 mm (0.2 in.).
  - Fasteners must hold a minimum of 20 kg (44 lb).
- Install mounting brackets at the following maximum heights from the ground:
  - 5-slot cradle: 1.2 m (4 ft)
  - 4-slot battery charger: 0.91 m (3 ft)

Bottom Tray Assembly

See steps 1 through 5 of 5-Slot Cradle Bracket Installation for instructions.

Mounting the Bracket

CAUTION: Installer should ensure that all building codes are followed when connecting the power supplies to an AC power source.

While installing the brackets, power supplies and cables:

- Use tie wraps to secure cables to the bracket and rails.
- Coil cables wherever possible.
- Route power cables along the rails.
- Route inter-cradle cables to the side rails and then from the rails to the bracket.

1. Drill holes and install anchors according to the template supplied with the bracket.
2. Install two screws for bottom of bracket. The screw heads should protrude 2.5 mm (0.01 in.) from the wall.

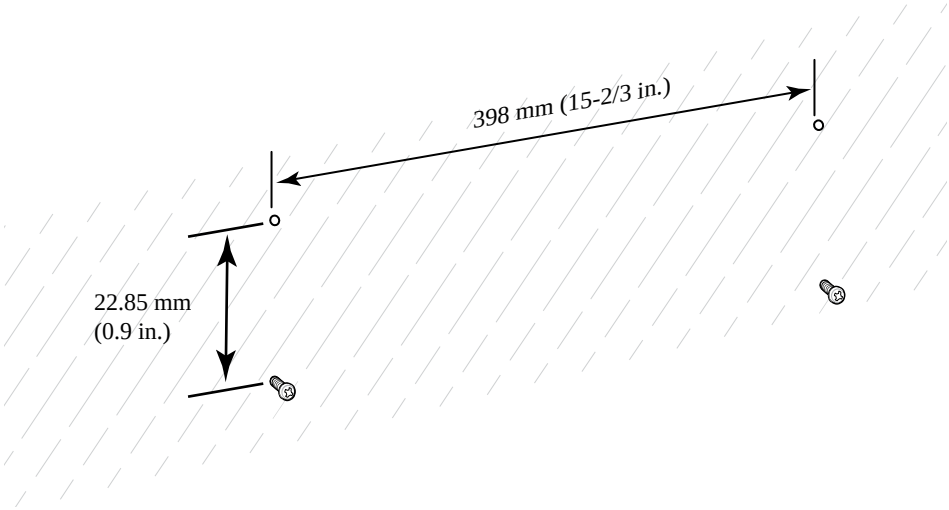

3. Align the mounting bracket's bottom mounting key holes with the screws.
4. Hang the bracket on the screws.

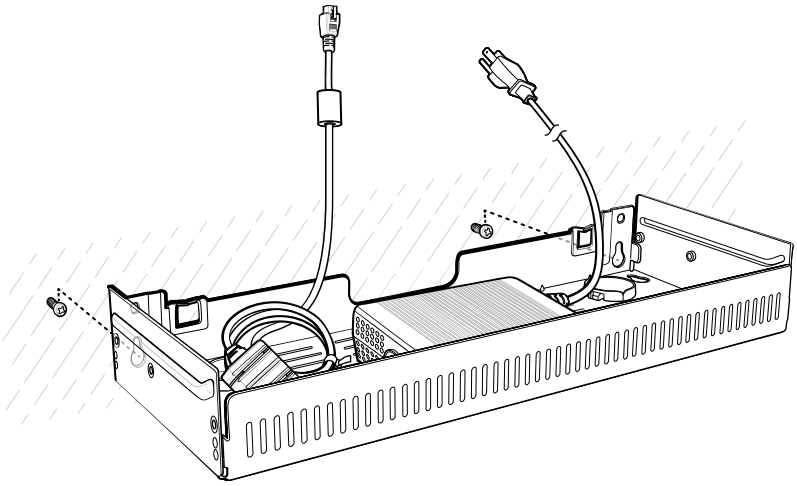

5. Install two top screws.
6. Tighten all screws.

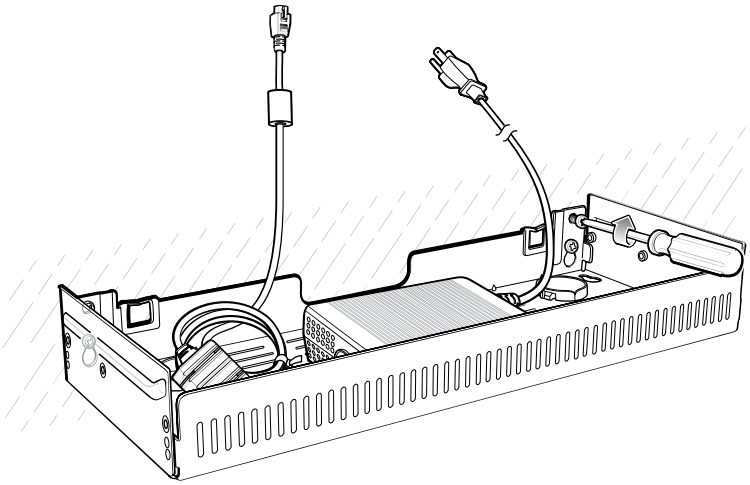

7. Add the four 4-Slot Battery Chargers or cradle onto the bracket.
8. Route cables and connect to power source.

Application Deployment

This section provides an overview of device security, app development, and app management. It also provides instructions for installing apps and updating the device software.

NOTE: Ensure the date is set correctly before installing certificates or when accessing secure websites.

Security

The current Bluetooth specification defines security at the link level. Application-level security is not specified. This allows application developers to define security mechanisms tailored to their specific needs. Link-level security occurs between devices, not users, while application-level security can be implemented on a per-user basis. The Bluetooth specification defines security algorithms and procedures required to authenticate devices, and if needed, encrypt the data flowing on the link between the devices. Device authentication is a mandatory feature of Bluetooth while link encryption is optional.

Pairing of Bluetooth devices is accomplished by creating an initialization key used to authenticate the devices and create a link key for them. Entering a common personal identification number (PIN) in the devices being paired generates the initialization key. The PIN is never sent over the air. By default, the Bluetooth stack responds with no key when a key is requested (it is up to you to respond to the key request event). Authentication of Bluetooth devices is based upon a challenge-response transaction. Bluetooth allows for a PIN or passkey used to create other 128-bit keys used for security and encryption. The encryption key is derived from the link key used to authenticate the pairing devices. Also, the limited range and fast frequency hopping of the Bluetooth radios make long-distance eavesdropping difficult.

Recommendations are:

- Perform pairing in a secure environment.
- Keep PIN codes private and do not store the PIN codes in the device.
- Implement application-level security.

Secure Certificates

If the VPN or Wi-Fi networks rely on secure certificates, obtain the certificates and store them in the device's secure credential storage before configuring access to the VPN or Wi-Fi networks.

If downloading the certificates from a website, set a password for the credential storage. The device supports X.509 certificates saved in PKCS#12 key store files with a .p12 extension (if key store has a .pfx or other extension, change to .p12).

The device also installs any accompanying private key or certificate authority certificates contained in the key store.

Installing a Secure Certificate

If required by the VPN or Wi-Fi network, install a secure certificate on the device.

1. Copy the certificate from the host computer to the root of the microSD card or the device's internal memory.
2. Go to **Settings**.
3. Touch **Security** > **More security settings** > **Encryption & credentials**.
4. Touch **Install a certificate**.
5. Navigate to the location of the certificate file.
6. Touch the filename of the certificate to install.
7. If prompted, enter the password for credential storage and touch **OK**.

   If a password has not been set for the credential storage, enter a password for it twice, and then touch **OK**.
8. Enter a name for the certificate, and in the **Credential use** drop-down menu, select **VPN and apps** or **Wi-Fi**.
9. Touch **OK**.

The certificate can now be used when connecting to a secure network. For security, the certificate is deleted from the microSD card or the internal memory.

Configuring Credential Storage Settings

Configure credential storage from the device settings.

1. Go to **Settings**.
2. Touch **Security** > **Encryption & credentials**.
3. Select an option.
   - Touch **Trusted credentials** to display the trusted system and user credentials.
   - Touch **User credentials** to display user credentials.
   - Touch **Install a certificate** to install a secure certificate from the microSD card or internal storage.
   - Touch **Clear credentials** to delete all secure certificates and related credentials.

Android Development Tools

Development tools for Android include Android Studio, EMDK for Android, and StageNow.

Android Development Workstation

Android development tools are available at developer.android.com.

To start developing applications for the device, download Android Studio. Development can take place on a Microsoft® Windows®, Mac® OS X®, or Linux® operating system.

Applications are written in Java or Kotlin, but compiled and executed in the Dalvik virtual machine. After the Java code is compiled cleanly, the developer tools make sure the application is packaged properly, including the AndroidManifest.xml file.

Android Studio contains a full featured IDE as well as SDK components required to develop Android applications.

Enabling Developer Options

The **Developer options** screen sets development-related settings. By default, the Developer Options are hidden.

1. Go to **Settings**.
2. Touch **About phone** .
3. Scroll down to **Build number**.
4. Tap **Build number** seven times.

   The message **You are now a developer** displays.
5. Touch **Back**.
6. Touch **System > Developer options**.

EMDK for Android

EMDK for Android provides developers with tools to create business applications for enterprise mobile devices. It is designed for use with Google's Android Studio and includes Android class libraries such as Barcode, sample applications with source code, and the associated documentation.

EMDK for Android allows applications to take full advantage of the capabilities that Zebra devices have to offer. It embeds Profile Manager technology within Android Studio IDE, providing a GUI-based development tool designed specifically for Zebra devices. This allows fewer lines of code, resulting in reduced development time, effort, and errors.

For more information, go to techdocs.zebra.com/emdk-for-android/about/.

StageNow for Android

StageNow is Zebra's next-generation Android Staging Solution built on the MX platform. It allows quick and easy creation of device profiles and can deploy to devices simply by scanning a barcode or reading a tag.

The StageNow Staging Solution includes the following components:

- The StageNow Workstation tool installs on the staging workstation (host computer) and lets the administrator easily create staging profiles for configuring device components, and perform other staging actions such as checking the condition of a target device to determine suitability for software upgrades or other activities. The StageNow Workstation stores profiles and other created content for later use.
- The StageNow Client resides on the device and provides a user interface for the staging operator to initiate staging. The operator uses one or more of the desired staging methods (print and scan a barcode or read an NFC tag) to deliver staging material to the device.

For more information, go to techdocs.zebra.com/stagenow/.

GMS Restricted

GMS Restricted mode deactivates Google Mobile Services (GMS). All GMS apps are disabled on the device and communication with Google (analytics data collection and location services) is disabled.

Use StageNow to disable or enable GMS Restricted mode. After a device is in GMS Restricted mode, enable and disable individual GMS apps and services using StageNow. To ensure GMS Restricted mode persists after an Enterprise Reset, use the Persist Manager option in StageNow.

For more information, go to techdocs.zebra.com/gmsmgr/.

ADB USB Setup

To use the Android Debug Bridge (ADB), install the development SDK on the host computer then install the ADB and USB drivers.

Before installing the USB driver, make sure that the development SDK is installed on the host computer. Go to developer.android.com/sdk/index.html for details on setting up the development SDK.

The ADB and USB drivers for Windows and Linux are available on the Zebra Support Central website at zebra.com/support. Download the ADB and USB Driver Setup package. Follow the instructions with the package to install the ADB and USB drivers for Windows and Linux.

Enabling USB Debugging

By default, USB debugging is disabled.

1. Go to **Settings**.
2. Touch **About phone**.
3. Scroll down to **Build number**.
4. Tap **Build number** seven times.

   The message **You are now a developer!** displays.
5. Touch **Back**.
6. Touch **System** > **Developer options**.
7. Slide the **USB debugging** switch to the **ON** position.
8. Touch **OK**.
9. Connect the device to the host computer using the Rugged Charge/USB Cable.

   The **Allow USB debugging?** dialog box displays on the device.

   If the device and host computer are connected for the first time, the **Allow USB debugging?** dialog box with the **Always allow from this computer** check box displays. Select the check box, if required.
10. Touch **OK**.
11. Touch **OK** or **Allow**.
12. On the host computer, navigate to the **platform-tools** folder and open a command prompt window.
13. Type `adb devices`.

    The following displays:

```
List of devices attached          XXXXXXXXXXXXXXX device
```

Where XXXXXXXXXXXXXXX is the device number.

NOTE: If device number does not display, ensure that ADB drivers are installed properly.

14. Return to the Home screen.

Entering Android Recovery Manually

Many of the update methods discussed in this section require putting the device into Android Recovery mode. If you are unable to enter Android Recovery mode through adb commands, use the following steps to manually enter Android Recovery mode.

1. Press and hold the Power button until the menu displays.
2. Touch **Restart**.
3. Press and hold the PTT button until the device vibrates.

   The System Recovery screen displays.

Application Installation Methods

After an application is developed, install the application onto the device using one of the supported methods.

- USB connection, go to Installing Applications Using the USB Connection.
- Android Debug Bridge, go to Installing Applications Using the Android Debug Bridge.
- Wireless Android Debug Bridge, go to Installing Applications Using the Wireless Android Debug Bridge.
- microSD Card, go to Installing Applications Using the microSD card.
- Mobile device management (MDM) platforms that have application provisioning. Refer to the MDM software documentation for details.

Installing Applications Using the USB Connection

Use the USB connection to install applications onto the device.

CAUTION—PRODUCT DAMAGE: When connecting the device to a host computer and mounting the microSD card, follow the host computer's instructions for connecting and disconnecting USB devices, to avoid damaging or corrupting files.

1. Connect the device to a host computer using the Rugged Charge/USB cable.
2. On the device, pull down the Notification panel and touch **Charging this device via USB**.

   By default, **No data transfer** is selected.
3. Touch **File Transfer**.
4. On the host computer, open a file explorer application.
5. On the host computer, copy the application APK file from the host computer to the device.

CAUTION—PRODUCT DAMAGE: Carefully follow the host computer's instructions to unmount the microSD card and disconnect USB devices correctly to avoid losing information.

6. Disconnect the device from the host computer.
7. Swipe the screen up and select to view files on the Internal Storage.
8. Locate the application APK file.
9. Touch the application file.
10. Touch **Continue** to install the app or **Cancel** to stop the installation.
11. To confirm installation and accept what the application affects, touch **Install**. Otherwise, touch **Cancel**.
12. Touch **Open** to open the application or **Done** to exit the installation process.

    The application displays in the App list.

Installing Applications Using the Android Debug Bridge

Use ADB commands to install applications onto the device.

1. Ensure that the ADB drivers are installed on the host computer.
2. Connect the device to a host computer using the USB-C cable.

   When transferring files or debugging, ensure only one USB connection to the device exists. For example, do not dock the device or attach an expansion back if using a USB cable.
3. Go to **Settings**.
4. Touch **System** > **Developer options**.
5. Slide the **USB debugging** switch to the **ON** position.
6. Touch **OK**.
7. If the device and host computer are connected for the first time, the **Allow USB debugging?** dialog box with the **Always allow from this computer** check box displays. Select the check box, if required.
8. Touch **OK** or **Allow**.
9. On the host computer, navigate to the **platform-tools** folder and open a command prompt window.
10. Type `adb install <application>`.

    where: `<application>` = the path and filename of the apk file.
11. Disconnect the USB-C cable from the device.

Installing Applications Using Wireless ADB

Use the Android Debug Bridge (ADB) to install an application over a Wi-Fi network, without needing a USB cable connection.

Before you begin, complete these prerequisite steps:

- Install the Android SDK Platform-Tools on your host computer.
- Save the application's `.apk` file to your host computer.
- Connect the device and the host computer to the same Wi-Fi network.
- Enable Developer options on the device.

1. On the device, go to **Settings** > **System** > **Developer options**.
2. Scroll down and touch the **Wireless debugging** toggle to enable it.
3. In the **Allow wireless debugging on this network?** dialog box, touch **Allow**.
4. Touch the **Wireless debugging** text to open its settings screen and note the IP address and port number under **IP address & Port**.
5. On the same screen, touch **Pair device with pairing code** and note the new IP address, port, and Wi-Fi pairing code that display.
6. On the host computer, open a terminal window and execute the `adb pair` command with the IP address and port from the **Pair with device** dialog:

```
adb pair 192.168.1.100:41235
```

7. When the terminal prompts you, enter the pairing code from the device and press Enter.

   The terminal confirms **Successfully paired**.
8. Execute the `adb connect` command with the IP address and original port number from the main **Wireless debugging** screen:

```
adb connect 192.168.1.100:37899
```

   The terminal confirms the connection.
9. Execute `adb devices` to confirm the connection. The output lists your device's IP address.
10. Execute the `adb install` command with the path to your `.apk` file:

```
adb install C:\path\to\your\app.apk
```

   A **Success** message displays, and the application icon now displays in the device's app drawer.
11. When you finish, disconnect the session with the `adb disconnect` command.

Installing Applications Using a microSD Card

Use a microSD card to install applications on your device.

CAUTION—PRODUCT DAMAGE: When connecting the device to a host computer and mounting the microSD card, follow the host computer's instructions for connecting and disconnecting USB devices, to avoid damaging or corrupting files.

It is strongly recommended that prior to use, you must format the microSD card on the device.

1. Copy the APK file to the root of the microSD card.
   - Copy the APK file to a microSD card using a host computer (go to USB Communication for more information), and then install the microSD card into the device (see Replacing the microSD Card for more information).
   - Connect the device with a microSD card already installed to the host computer, and copy the .apk file to the microSD card. Go to USB Communication for more information. Disconnect the device from the host computer.
2. Connect the device to a host computer using USB.

3. Copy the application APK file from the host computer to the microSD card.
4. Remove the microSD card from the host computer.
5. Press and hold the Power button on the device until the menu displays.
6. Touch **Power off**.
7. Press the two battery latches in.
8. Lift the battery from the device.
9. Lift the access door.
10. Insert the microSD card.
11. Replace the access door.
12. Insert the battery, bottom first, into the battery compartment in the back of the device.
13. Press the battery down until the battery release latches snap into place.
14. Press and hold **Power** to turn on the device.
15. Swipe the screen up and select to view files on the microSD card.
16. Locate the application APK file.
17. Touch the application file.
18. Touch **Continue** to install the app or **Cancel** to stop the installation.
19. To confirm installation and accept what the application affects, touch **Install**. Otherwise, touch **Cancel**.
20. Touch **Open** to open the application or **Done** to exit the installation process.

    The application displays in the App list.

See Also

USB Communication

Uninstalling an Application

Free up device memory by removing unused apps.

1. Go to **Settings**.
2. Touch **Apps**.
3. Touch **See all apps** to view all apps in the list.
4. Scroll through the list to the app.
5. Touch the app.

   The **App info** screen displays.
6. Touch **Uninstall**.
7. Touch **OK** to confirm.

Android System Update

System Update packages can contain either partial or complete updates for the operating system. Zebra distributes the System Update packages on the Zebra Support & Downloads website. Perform a system update using either a microSD card or using ADB.

Performing a System Update Using a USB Drive

Use a USB drive to perform a system update.

1. Connect the device to a host computer using a USB-C cable or by inserting the device into the 1-Slot USB/Ethernet Cradle.
2. Go to **Settings**.
3. Touch **System** > **Developer options**.
4. Slide the **USB debugging** switch to the **ON** position.
5. If the device and host computer are connected for the first time, the **Allow USB debugging?** dialog box with the **Always allow from this computer** check box displays. Select the check box, if required.
6. Touch **OK**.
7. On the host computer, navigate to the **platform-tools** folder and open a command prompt window.
8. Type `adb devices`.

   If the device number does not display, ensure the ADB drivers are installed properly.
9. Type `adb reboot recovery`.
10. Press **Enter**.

    The System Recovery screen displays on the device.
11. Press **Volume Up** and **Volume Down** to navigate to **Apply upgrade from ADB**.
12. Press **Power**.
13. On the host computer command prompt window, type `adb sideload <file>`.

    where: <file> = the path and filename of the zip file.
14. Press **Enter**.

    The System Update installs (progress displays as a percentage in the Command Prompt window), and then the System Recovery screen displays on the device.
15. Press **Power** to reboot the device.

Performing a System Update Using microSD Card

It is strongly recommended that, prior to use, you format the microSD card on the device.

Go to the Zebra Support & Downloads website at zebra.com/support and download the appropriate System Update package to a host computer.

1. Copy the System Update ZIP file to the root of the microSD card.
   - Copy the ZIP file to a microSD card using a host computer, and then install the microSD card into the device. See Getting Started for information on installing the microSD card.

- Connect the device (with a microSD card already installed) to the host computer, copy the ZIP file to the microSD card, and then disconnect the device from the host computer.

2. Press and hold **Power** until the menu displays.
3. Touch **Restart**.
4. Press and hold **PTT** until the device vibrates.

   The System Recovery screen displays.
5. Press **Volume Up** or **Volume Down** to navigate to **Apply upgrade from SD card**.
6. Press **Power**.
7. Press **Volume Up** or **Volume Down** to navigate to the System Update file.
8. Press **Power**.

   The System Update installs, and then the device returns to the Recovery screen.
9. Press **Power** to reboot the device.

Performing a System Update Using ADB

Use ADB to perform a system update.

1. Connect the device to a host computer using a USB-C cable.

   When transferring files or debugging, ensure only one USB connection to the device exists. For example, do not dock the device or attach an expansion back if using a USB cable.
2. Go to **Settings**.
3. Touch **System** > **Developer options**.
4. Slide the **USB debugging** switch to the **ON** position.
5. If the device and host computer are connected for the first time, the **Allow USB debugging?** dialog box with the **Always allow from this computer** check box displays. Select the check box, if required.
6. Touch **USB Debugging**. A check displays in the check box. The **Allow USB debugging?** dialog box displays.
7. Press **Enter** or **Power** to select.
8. Touch **OK**.
9. Touch **OK** or **Allow**.
10. Press **Enter**.

    The System Recovery screen displays on the device.
11. Press **Enter**.
12. Press **Enter** or **Power** to select.
13. Use **Volume Up** and **Volume Down** to navigate to **Full OTA Package** or **Diff OTA Package**.

Verifying System Update Installation

Verify that the system update was successful.

1. Go to **Settings**.
2. Touch **About phone**.

3. Scroll down to **Build number**.
4. Ensure that the build number matches the new system update package file number.

Android-Enterprise Reset

An Enterprise Reset erases all user data in the /data partition, including data in the primary storage locations (/sdcard and emulated storage), while preserving the contents of the /enterprise folder and its subfolders. The contents of the /enterprise folder and its subfolders are preserved. Zebra distributes the Enterprise Reset packages on the Zebra Support & Downloads website.

Before performing an Enterprise Reset, provision all necessary configuration files and restore after the reset.

Performing an Enterprise Reset From Device Settings

Perform an Enterprise Reset from the device settings.

1. Go to **Settings**.
2. Touch **System > Reset Options > Erase all data (factory reset).**
3. Touch **Erase all data** twice to confirm the Enterprise Reset.

Performing an Enterprise Reset Using microSD Card

It is strongly recommended that, prior to use, you format the microSD card on the device.

1. Copy the Enterprise Reset zip file to the root of the microSD card.
   - Copy the zip file to a microSD card using a host computer and then install the microSD card into the device. See Getting Started for more information.
   - Connect the device with a microSD card already installed to the host computer and copy zip file to the microSD card. See USB Communication for more information. Disconnect the device from the host computer.
2. Press and hold **Power** until the menu displays.
3. Touch **Restart**.
4. Press and hold **PTT** until the device vibrates.

   The System Recovery screen displays.
5. Press **Volume Up** and **Volume Down** to navigate to **Apply upgrade from SD card**.
6. Press **Power**.
7. Press **Volume Up** and **Volume Down** to navigate to the Enterprise Reset file.
8. Press **Power**.

   The Enterprise Reset occurs and then the device returns to the Recovery screen.
9. Press **Power** to reboot the device.

Performing an Enterprise Reset Using ADB

Perform an Enterprise Reset using ADB.

Go to the Zebra Support & Downloads web site at zebra.com/support and download the appropriate Enterprise Reset file to a host computer.

1. Connect the device to a host computer using a USB-C cable.

   When transferring files or debugging, ensure only one USB connection to the device exists. For example, do not dock the device or attach an expansion back if using a USB cable.
2. Go to **Settings**.
3. Touch **System** > **Developer options**.
4. Use **Volume Up** and **Volume Down** to navigate to **Full OTA Package**.
5. If the device and host computer are connected for the first time, the **Allow USB debugging?** dialog box with the **Always allow from this computer** check box displays. Select the check box, if required.
6. Touch **OK** or **Allow**.
7. Touch **OK**.
8. Press **Scan** to reboot the device.
9. Use **Volume Up** and **Volume Down** to navigate to **Full OTA Package**.
10. Press **Power**.

Android Factory Reset

A Factory Reset erases all data in the /data and /enterprise partitions in internal storage and clears all device settings. A Factory Reset returns the device to the last installed operating system image. To revert to a previous operating system version, re-install that operating system image. Zebra distributes the Factory Reset packages on the Zebra Support & Downloads website.

Performing a Factory Reset Using microSD Card

Perform a Factory Reset using a microSD card.

Go to the Zebra Support & Downloads website at zebra.com/support and download the appropriate Factory Reset file to a host computer.

1. Copy the Factory Reset zip file to the root of the microSD card.
   - Copy the zip file to a microSD card using a host computer and then installing the microSD card into the device. Go to Getting Started for more information.
   - Connect the device with a microSD card already installed to the host computer, copy zip file to the microSD card, and then disconnect the device from the host computer.
2. Press and hold **Power** until the menu displays.
3. Touch **Restart**.
4. Press and hold **PTT** until the device vibrates.

   The System Recovery screen displays.
5. Press **Volume Up** or **Volume Down** to navigate to **Apply upgrade from SD card**.

6. Press **Power**.
7. Use **Up Arrow** or **Down Arrow** to navigate to the Factory Reset file.
8. Press **Power**.

   The Factory Reset occurs, and then the device returns to the Recovery screen.
9. Press **Power** to reboot the device.

See Also

USB Communication

Performing a Factory Reset Using ADB

Initiate a Factory Reset on the using ADB.

Go to the Zebra Support & Downloads web site at zebra.com/support and download the appropriate Factory Reset file to a host computer.

1. Connect the device to your host computer with a USB cable.
2. Open a command prompt or terminal on your host computer.
3. Verify your device's ADB connection by running the following command:

   ```
   adb devices
   ```

   If the command lists your device as "unauthorized," check the device's screen. You must accept the RSA key fingerprint prompt to authorize the connection.
4. Reboot the device into its recovery mode by executing this command:

   ```
   adb reboot recovery
   ```

   The device restarts and displays the Android Recovery menu.
5. Use **Volume Up** or **Volume Down** to navigate the recovery menu.

   You cannot use ADB to control the device while it is in recovery mode.
6. Navigate to and highlight the **Wipe data/factory reset** option.
7. Press the device's **Power** button to select the option.
8. Navigate to and select **Factory data reset** to confirm your choice.

   The device begins the factory reset process. This may take several minutes to complete.
9. After the device completes the data wipe, the recovery menu reappears. Tap the **Reboot system now** option.

The device reboots and starts the initial setup wizard. You have successfully performed a factory reset.

Android Storage

The device contains multiple types of file storage.

- Random Access Memory (RAM)

- On-device Storage
- Internal storage
- External storage (microSD card)
- Enterprise folder

NOTE: It is recommended to install a microSD card on the device due to limited internal storage space.

Random Access Memory

Executing programs use RAM to store data. Data stored in RAM is lost upon a reset.

The operating system manages how applications use RAM. It only allows applications and component processes and services to use RAM when required. It may cache recently used processes in RAM, so they restart more quickly when opened again, but it will erase the cache if it needs the RAM for new activities.

The screen displays the amount of used and free RAM.

- **Performance** - Indicates memory performance.
- **Total memory** - Indicates the total amount of RAM available.
- **Average used (%)** - Indicates the average amount of memory (as a percentage) used during the period of time selected (default - 3 hours).
- **Free** - Indicates the total amount of unused RAM.
- **Memory used by apps** - Touch to view RAM usage by individual apps.

Viewing Memory

View the amount of memory used and free RAM.

Complete Enabling Developer Options before you continue:

1. Go to **Settings**.
2. Touch **System** > **Developer options**.
3. Touch **Memory**.

Internal Storage

The device has internal storage. The internal storage content can be viewed and files copied to and from when the device is connected to a host computer. Some applications are designed to be stored on the internal storage rather than in internal memory.

Viewing Internal Storage

View available and used internal storage on the device.

1. Go to **Settings**.
2. Touch **Storage**.

   Storage displays the total amount of space on internal storage and amount used.

If the device has removable storage installed, touch **Internal shared storage** to display the amount of internal storage used by apps, photos, videos, audio, and other files.

External Storage

The device can have a removable microSD card. The microSD card content can be viewed and files copied to and from when the device is connected to a host computer. The device can have a removable USB drive. The USB drive content can be viewed and files copied to and from when the device is connected to a host computer.

Viewing External Storage

Portable storage displays the total amount of space on the installed microSD card or USB drive and the amount used.

1. Go to **Settings**.
2. Touch **Storage**.

   Touch **General USB Drive** to view the contents of the card.

   Touch **SD card** to view the contents of the card.
3. To unmount the microSD card, touch ⏏.
4. To unmount the USB drive, touch ⏏.

Formatting a microSD Card as Portable Storage

Format a microSD card as portable storage for the device.

1. Touch **SD card**.
2. Touch ⋮ > **Storage settings**.
3. Touch **Format**.
4. Touch **ERASE & FORMAT**.
5. Touch **DONE**.

Formatting a microSD Card as Internal Memory

You can format a microSD card as internal memory to increase the actual amount of the device's internal memory. Once formatted, the microSD card can only be read by this device.

NOTE: The suggested maximum SD card size is 128 GB when using internal storage.

1. Touch **SD card**.
2. Touch ⋮ > **Storage settings**.
3. Touch **Format as internal**.
4. Touch **ERASE & FORMAT**.
5. Touch **DONE**.

Enterprise Folder

The Enterprise folder (within internal flash) is a super-persistent storage that is persistent after a reset and an Enterprise Reset.

The Enterprise folder is erased during a Factory Reset. The Enterprise folder is used for deployment and device-unique data. The Enterprise folder is approximately 512 MB (formatted). Applications can persist data after an Enterprise Reset by saving data to the enterprise/user folder. The folder is ext4 formatted and is only accessible from a host computer using ADB or from an MDM.

Managing Apps

Apps use two kinds of memory: storage memory and RAM. Apps use storage memory for themselves and any files, settings, and other data they use. They also use RAM when they are running.

1. Go to **Settings**.
2. Touch **Apps**.
3. Touch **See all apps** to view all apps on the device.
4. Touch ⋮ > **Show system** to include system processes in the list.
5. Touch an app, process, or service in the list to open a screen with details about it and, depending on the item, to change its settings, permissions, notifications and to force stop or uninstall it.

App Details

Apps have different kinds of information and controls.

- **Force stop** - Stop an app.
- **Disable** - Disable an app.
- **Uninstall** - Remove the app and all of its data and settings from the device.
- **Notifications** - Set the app notification settings.
- **Permissions** - Lists the areas on the device that the app has access to.
- **Storage & cache** - Lists how much information is stored and includes buttons for clearing it.
- **Mobile data & Wi-Fi** - Provides information about data consumed by an app.
- **Mobile data & Wi-Fi** - Provides information about data consumed by an app. Mobile data not supported.
- **Advanced:**
  - **Screen time** - Displays the amount of time the app has displayed on the screen.
  - **Battery** - Lists the amount of computing power used by the app.
  - **Open by default** - If you have configured an app to launch certain file types by default, you can clear that setting here.
  - **Display over other apps** - Allows an app to display on top of other apps.
  - **App details** - Provides a link to additional app details on the Play store.
  - **Additional settings in the app** - Opens settings in the app.
  - **Modify system settings** - Allows an app to modify the system settings.

Managing Downloads

Files and apps downloaded using the Browser or Email are stored on the USB drive, microSD card, or Internal storage in the Download directory. Use the Downloads app to view, open, or delete downloaded items.

1. Swipe the screen up and touch .
2. Touch > **Downloads**.
3. Touch and hold an item to delete, and then touch .

   The item is deleted from the device.

Maintenance and Troubleshooting

This section includes instructions on cleaning and storing the device, and provides troubleshooting solutions for potential problems during operation.

Maintaining the Device

For trouble-free service, follow these tips when using the device.

- To avoid scratching the screen, use a stylus (sold separately) or plastic-tipped pens intended for use with a touch-sensitive screen. Never use an actual pen, pencil, or any other sharp object on the device's screen.
- The touch-sensitive screen of the device is glass. Do not drop the device or subject it to strong impact.
- Protect the device from temperature extremes. Do not leave it on a car dashboard on a hot day, and keep it away from heat sources.
- Do not store the device in any location that is dusty, damp, or wet.
- Use a soft lens cloth to clean the device. If the surface of the device screen becomes soiled, clean it with a soft cloth moistened with an approved cleanser. For a list of approved cleansers, go to Approved Cleaning and Disinfectant Agents.
- Periodically replace the rechargeable battery to ensure maximum battery life and product performance. Battery life depends on individual usage patterns.

Display Best Practices

This section describes the best practices for the device's display.

Image retention can occur when a static image displays continuously for an extended period. You may see a faint remnant of the image even after a new image appears.

To prevent image retention, follow these guidelines:

- Set the display to turn off after a few minutes of idle time.
- Rotate background images periodically.
- Turn off the display when you are not using the device.
- Use a screen saver with the following configuration:
  - Set the background color to black.

- Use a small, moving image (approximately 2% of the display size).
- Move the image randomly across the screen.
- Ensure the screen saver remains active for as long as a static image is displayed.

Best Practices for Enterprise Mobile Devices Operating in Hot Environments and Direct Sunlight

Exceeding the operating temperature by external hot environments will cause the device's thermal sensor to notify the user of a shutdown of the WAN modem or shut down the device until the device's temperature returns to the operational temperature range.

- Avoid direct sunlight to the device - The easiest way to prevent overheating is to keep the device out of direct sunlight. The device absorbs sunlight and heat and retains them, getting hotter the longer it remains in sunlight and heat.
- Avoid leaving the device in a vehicle on a hot day or hot surface - Similar to leaving the device out in direct sunlight, the device will also absorb the thermal energy from a hot surface or when left on the dashboard of a vehicle or seat, getting warmer the longer it remains on the hot surface or inside the hot vehicle.
- Turn off unused apps on the device. Open, unused apps running in the background can make the device to work harder, which may cause it to heat up. This will also improve your mobile device's battery life.
- Avoid turning your screen brightness up - Just the same as running background apps, turning your brightness up will force your battery to work harder and create more heat. Minimizing your screen brightness may extend the time you can use the mobile computer device in hot environments.

Battery Safety Guidelines

To use the device safely, you must follow the battery guidelines.

- The area in which the units are charged should be clear of debris and combustible materials or chemicals. Particular care should be taken when the device is charged in a non-commercial environment.
- Follow the battery usage, storage, and charging guidelines found in this guide.
- Improper battery use may result in a fire, explosion, or other hazard.
- To charge the mobile device battery, the ambient battery and charger temperatures must be between 5°C to 40°C (41°F to 104°F).
- The maximum operating temperature is 50°C (122°F).
- Do not use incompatible batteries and chargers, including non-Zebra batteries and chargers. Use of an incompatible battery or charger may present a risk of fire, explosion, leakage, or other hazard. If you have any questions about the compatibility of a battery or a charger, contact the Global Customer Support Center.
- For devices that utilize a USB port as a charging source, the device shall only be connected to products that bear the USB-IF logo or have completed the USB-IF compliance program.
- Do not disassemble, open, crush, bend, deform, puncture, or shred the battery.
- Severe impact from dropping any battery-operated device on a hard surface could cause the battery to overheat.

- Do not short-circuit a battery or allow metallic or conductive objects to contact the battery terminals.
- Do not modify or remanufacture, attempt to insert foreign objects into the battery, immerse or expose to water or other liquids, or expose to fire, explosion, or other hazard.
- Do not leave or store the equipment in or near areas that might get very hot, such as in a parked vehicle or near a radiator or other heat source. Do not place a battery into a microwave oven or dryer.
- Battery usage by children should be supervised.
- Please follow local regulations to properly dispose of used rechargeable batteries.
- Do not dispose of batteries in a fire.
- Seek medical advice immediately if a battery has been swallowed.
- In the event of a battery leak, do not allow the liquid to come in contact with the skin or eyes. If contact has been made, wash the affected area with water for 15 minutes, and seek medical advice.
- If you suspect damage to your equipment or battery, contact Customer Support to arrange for inspection.

Cleaning Instructions

CAUTION: Always wear eye protection. Read the warning label on the alcohol product before using. If you have to use any other solution for medical reasons, contact the Global Customer Support Center for more information.

WARNING: Avoid exposing this product to contact with hot oil or other flammable liquids. If such exposure occurs, unplug the device and clean the product immediately in accordance with these guidelines.

Cleaning and Disinfecting Guidelines

- Turn off and/or disconnect the device from AC/DC power.
- To avoid damage to the device or accessory, use only approved cleaning and disinfecting agents specified for the device.
- Follow the manufacturer's directions on the approved cleaning and disinfecting agent for how to use their product properly and safely.
- Use pre-moistened wipes or dampen a soft sterile cloth (not wet) with the approved agent. Never spray or pour chemical agents directly onto the device.
- Use a moistened cotton-tipped applicator to reach tight or inaccessible areas. Be sure to remove any lint left over by the applicator.
- Do not allow liquid to pool.
- Allow the device to air dry before use, or dry with a soft lint-free cloth or towelette. Ensure electrical contacts are fully dry before reapplying power connectors.

Approved Cleaning and Disinfectant Agents

100% of the active ingredients in any cleaner must consist of one or some combination of the following: isopropyl alcohol, bleach/sodium hypochlorite[1 (see important note below)], hydrogen peroxide, ammonium chloride, or mild dish soap.

IMPORTANT: Use pre-moistened wipes and do not allow liquid cleaner to pool.

[1] When using sodium hypochlorite (bleach) based products, always follow the manufacturer's recommended instructions: use gloves during application and remove the residue afterwards with a damp alcohol cloth or a cotton swab to avoid prolonged skin contact while handling the device. Due to the powerful oxidizing nature of sodium hypochlorite, the metal surfaces on the device are prone to oxidation (corrosion) when exposed to this chemical in the liquid form (including wipes).

In the event that these types of disinfectants come in contact with metal on the device, prompt removal with an alcohol-dampened cloth or cotton swab after the cleaning step is critical.

Special Cleaning Notes

The device should not be handled while wearing vinyl gloves containing phthalates, or before hands are washed to remove contaminant residue after gloves are removed.

If products containing any of the harmful ingredients listed above are used prior to handling the device, such as hand sanitizer that contains ethanolamine, hands must be completely dry before handling the device to prevent damage to the device.

IMPORTANT: If the battery connectors are exposed to cleaning agents, thoroughly wipe off as much of the chemical as possible and clean with an alcohol wipe. It is also recommended to install the battery in the terminal prior to cleaning and disinfecting the device to help minimize buildup on the connectors.

When using cleaning/disinfectant agents on the device, it is important to follow the directions prescribed by the cleaning/disinfectant agent manufacturer.

Cleaning Frequency

The cleaning frequency is at the customer's discretion due to the varied environments in which the mobile devices are used and may be cleaned as frequently as required. When dirt is visible, it is recommended to clean the mobile device to avoid the build-up of particles which make the device more difficult to clean later on.

For consistency and optimum image capture, it is recommended to clean the camera window periodically, especially when used in environments prone to dirt or dust.

Cleaning the Device

The section provides information for cleaning the device.

Housing

Thoroughly wipe the housing, including all buttons and triggers, using an approved alcohol wipe.

Display

The display can be wiped down with an approved alcohol wipe, but care should be taken not to allow any pooling of liquid around the edges of the display. Immediately dry the display with a soft, non-abrasive cloth to prevent streaking.

Camera and Exit Window

Wipe the camera and exit window periodically with a lens tissue or other material suitable for cleaning optical material such as eyeglasses.

Battery Guide Slots

Insert a cotton-tipped applicator dipped in alcohol into the battery guide rails to clean out debris and then dry with a dry cotton-tipped applicator.

Cleaning the Battery Connector

This section describes the method for cleaning the battery connectors.

1. Remove the main battery from the mobile computer.

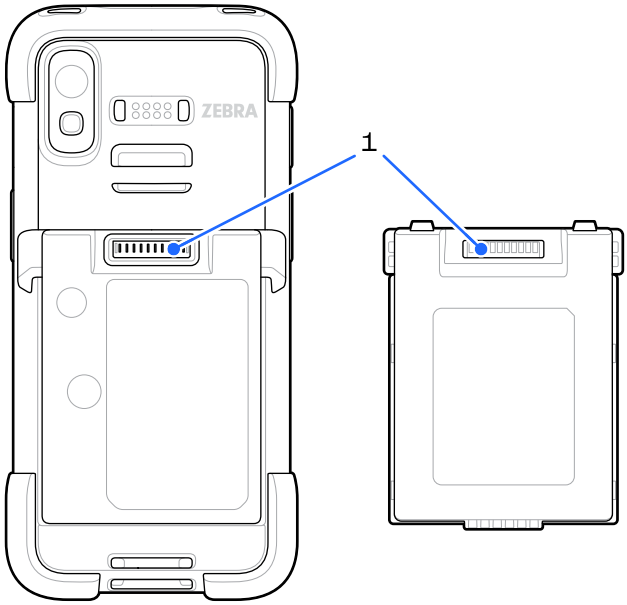

1	Battery connectors

2. Dip the cotton portion of the cotton-tipped applicator in isopropyl alcohol.
3. To remove any grease or dirt, rub the cotton portion of the cotton-tipped applicator back-and-forth across the connectors on the battery and terminal sides. Do not leave any cotton residue on the connectors.
4. Repeat at least three times.
5. Use a dry cotton-tipped applicator and repeat steps 3 and 4. Do not leave any cotton residue on the connectors.
6. Inspect the area for any grease or dirt and repeat the cleaning process if necessary.

CAUTION: After cleaning the battery connectors with bleach-based chemicals, follow the Battery Connector Cleaning instructions to remove bleach from the connectors.

Cleaning Cradle Connectors

This section describes the method for cleaning the cradle connectors.

1. Remove the DC power cable from the cradle.
2. Dip the cotton portion of the cotton-tipped applicator in isopropyl alcohol.
3. Rub the cotton portion of the cotton-tipped applicator along the pins of the connector. Slowly move the applicator back-and-forth from one side of the connector to the other. Do not leave any cotton residue on the connector.
4. All sides of the connector should also be rubbed with the cotton-tipped applicator.
5. Remove any lint left by the cotton-tipped applicator.
6. If grease and other dirt can be found on other areas of the cradle, use a lint-free cloth and alcohol to remove.
7. Allow at least 10 to 30 minutes (depending on ambient temperature and humidity) for the alcohol to air dry before applying power to cradle.
8. If the temperature is low and humidity is high, longer drying time is required. Warm temperature and low humidity requires less drying time.

CAUTION: After cleaning the cradle connectors with bleach-based chemicals, follow the Cleaning Cradle Connectors instructions to remove bleach from the connectors.

Troubleshooting

This section provides information for resetting and troubleshooting the device and accessories.

Resetting the Device

There are two reset functions, soft reset and hard reset.

Performing a Soft Reset

Perform a soft reset if applications stop responding.

1. Press and hold the Power button until the menu displays.

2. Touch **Restart**.
3. The device reboots.

Performing a Hard Reset

Perform a hard reset if the device stops responding.

CAUTION: Performing a hard reset with a microSD card installed in the device may cause damage or data corruption to the microSD card.

1. Simultaneously press the Power, left scan, and Volume Up buttons for at least four seconds.
2. When the screen turns off, release the buttons.
3. The device reboots.

Device Troubleshooting

Provides solutions to common device issues.

Table 33 Troubleshooting the Device

Problem	Cause	Solution
After installing the battery, the device does not boot up.	Power button was not pressed.	Press the Power button.
When pressing the power button the device does not turn on.	Battery not charged.	Charge or replace the battery in the device.
	Battery not installed properly.	Install the battery properly.
	System crash.	Perform a reset.
When pressing the power button the device does not turn on but two LEDs blink.	Battery charge is at a level where data is maintained but battery should be re-charged.	Charge or replace the battery in the device.
Battery did not charge.	Battery failed.	Replace battery. If the device still does not operate, perform a reset.
	Device removed from cradle while battery was charging.	Insert device in cradle. Go to Charging the Device.
	Extreme battery temperature.	Battery does not charge if ambient temperature is below 5°C (41°F) or above 40°C (104°F).
Cannot see characters on display.	Device not powered on.	Press the Power button.
	Device brightness too low.	Raise the brightness.
During data communication with a host computer, no data transmitted, or transmitted data was incomplete.	Device removed from cradle or disconnected from host computer during communication.	Replace the device in the cradle, or reattach the communication cable and re-transmit.
	Incorrect cable configuration.	See the system administrator.
	Communication software was incorrectly installed or configured.	Perform setup.

Table 33 Troubleshooting the Device (Continued)

Problem	Cause	Solution
During data communication over Wi-Fi, no data transmitted, or transmitted data was incomplete.	Wi-Fi radio is not on.	Turn on the Wi-Fi radio.
	You moved out of range of an access point.	Move closer to an access point.
During data communication over Bluetooth, no data transmitted, or transmitted data was incomplete.	Bluetooth radio is not on.	Turn on the Bluetooth radio.
	You moved out of range of another Bluetooth device.	Move within 10 meters (32.8 feet) of the other device.
During data communication over WAN, no data transmitted, or transmitted data was incomplete.	You are in an area of poor cellular service.	Move into an area that has better service.
	APN is not set up correctly.	See system administrator for APN setup information.
	SIM card not installed properly.	Remove and re-install the SIM card.
	Data plan not activated.	Contact your service provider and ensure that your data plan is enabled.
No sound.	Volume setting is low or turned off.	Adjust the volume.
Device shuts off.	Device is inactive.	The display turns off after a period of inactivity. Set this period to 15 seconds, 30 seconds, 1, 2, 5, 10 or 30 minutes.
	Battery is depleted.	Replace the battery.
Tapping the window buttons or icons does not activate the corresponding feature.	The device is not responding.	Reboot the device.
A message displays stating that the device memory is full.	Too many files stored on the device.	Delete unused memos and records. If necessary, save these records on the host computer (or use an SD card for additional memory).
	Too many applications installed on the device.	Remove user-installed applications on the device to recover memory. Select **Settings** > **Apps & notifications**. Select the app in the list and select **UNINSTALL**.
The device does not decode with reading barcode.	Scanning application is not loaded.	Load a scanning application on the device or enable DataWedge. See the system administrator.
	Unreadable barcode.	Ensure the symbol is not defaced.
	Distance between exit window and barcode is incorrect.	Place the device within proper scanning range.

Table 33 Troubleshooting the Device (Continued)

Problem	Cause	Solution
	Device is not programmed for the barcode.	Program the device to accept the type of barcode being scanned. Refer to the EMDK or DataWedge application.
	Device is not programmed to generate a beep.	If the device does not beep on a good decode, set the application to generate a beep on good decode.
	Battery is low.	If the scanner stops emitting a laser beam upon a trigger press, check the battery level. When the battery is low, the scanner shuts off before the device low battery condition notification. **NOTE:** If the scanner is still not reading symbols, contact the distributor or the Global Customer Support Center.
Device cannot find any Bluetooth devices nearby.	Too far from other Bluetooth devices.	Move closer to the other Bluetooth device(s), within a range of 10 m (32.8 ft).
	The Bluetooth device(s) nearby are not turned on.	Turn on the Bluetooth device(s) to find.
	The Bluetooth device(s) are not in discoverable mode.	Set the Bluetooth device(s) to discoverable mode. If needed, refer to the device's user documentation for help.
Cannot unlock device.	User enters incorrect password.	If the user enters an incorrect password five times, the user is requested to wait for 30 seconds when using a PIN, Pattern or Password.

1-Slot Cradle Troubleshooting

The following table provides troubleshooting options for the cradle.

Table 34 Troubleshooting the 1-Slot Cradle

Problem	Cause	Solution
LEDs do not light when device is inserted.	Cradle is not receiving power.	Ensure the power cable is connected securely to both the cradle and to AC power.
	Device is not seated firmly in the cradle.	Remove and re-insert the device into the cradle, ensuring it is firmly seated.

Table 34 Troubleshooting the 1-Slot Cradle (Continued)

Problem	Cause	Solution
Device battery is not charging.	Device was removed from cradle or cradle was unplugged from AC power too soon.	Ensure cradle is receiving power. Ensure device is seated correctly. Confirm main battery is charging. The battery charges from fully depleted to 90% in less than 2 hours.
	Battery is faulty.	Verify that other batteries charge properly. If so, replace the faulty battery.
	The device is not fully seated in the cradle.	Remove and re-insert the device into the cradle, ensuring it is firmly seated.
	Extreme battery temperature.	Battery does not charge if ambient temperature is below 0°C (32°F) or above 50°C (122°F).

1-Slot Ethernet Cradle Troubleshooting

The following table provides troubleshooting options for the cradle.

Table 35 Troubleshooting the 1-Slot Ethernet Cradle

Problem	Cause	Solution
During communication, no data transmits, or transmitted data was incomplete.	Device removed from cradle during communications.	Replace device in cradle and retransmit.
	Incorrect cable configuration.	Ensure that the correct cable configuration.
	Device has no active connection.	An icon is visible in the status bar if a connection is currently active.
LEDs do not light when device is inserted.	Cradle is not receiving power.	Ensure the power cable is connected securely to both the cradle and to AC power.
	Device is not seated firmly in the cradle.	Remove and re-insert the device into the cradle, ensuring it is firmly seated.
Device battery is not charging.	Device was removed from cradle or cradle was unplugged from AC power too soon.	Ensure cradle is receiving power. Ensure device is seated correctly. Confirm main battery is charging. The battery charges from fully depleted to 90% in less than 2 hours.
	Battery is faulty.	Verify that other batteries charge properly. If so, replace the faulty battery.

Table 35 Troubleshooting the 1-Slot Ethernet Cradle (Continued)

Problem	Cause	Solution
	The device is not fully seated in the cradle.	Remove and re-insert the device into the cradle, ensuring it is firmly seated.
	Extreme battery temperature.	Battery does not charge if ambient temperature is below 0°C (32°F) or above 50°C (122°F).

4-Slot Battery Charger Troubleshooting

The following table provides troubleshooting options for the charger.

Table 36 Troubleshooting the 4-Slot Battery Charger

Problem	Cause	Solution
Spare Battery Charging LED does not light when spare battery is inserted.	Spare battery is not correctly seated.	Remove and re-insert the spare battery into the charging slot, ensuring it is correctly seated.
Spare Battery not charging.	Charger is not receiving power.	Ensure the power cable is connected securely to both the charger and to AC power.
	Spare battery is not correctly seated.	Remove and re-insert the battery into the battery adapter, ensuring it is correctly seated.
	Battery adapter is not correctly seated.	Remove and re-insert the battery adapter into the charger, ensuring it is correctly seated.
	Battery was removed from the charger or charger was unplugged from AC power too soon.	Ensure charger is receiving power. Ensure the spare battery is seated correctly. The battery charges from fully depleted to 90% in less than 2 hours.
	Battery is faulty.	Verify that other batteries charge properly. If so, replace the faulty battery.
	Ambient temperature of the cradle is too warm.	Move the cradle to an area where the ambient temperature is between 0°C (+32°F) and +50°C (+122°F).

5-Slot Cradle Troubleshooting

The following table provides troubleshooting options for the cradle.

Table 37 Troubleshooting the 5-Slot Cradle

Problem	Cause	Solution
Battery is not charging.	Device removed from the cradle too soon.	Replace the device in the cradle. The battery charges from fully depleted to 90% in less than 2 hours.
	Battery is faulty.	Verify that other batteries charge properly. If so, replace the faulty battery.
	Device is not inserted correctly in the cradle.	Remove the device and reinsert it correctly. Verify charging is active. Touch **Settings** > **Battery** to view battery status.
	Ambient temperature of the cradle is too warm.	Move the cradle to an area where the ambient temperature is between 5°C (+41°F) and +40°C (+104°F).

5-Slot Ethernet Cradle Troubleshooting

The following table provides troubleshooting options for the cradle.

Table 38 Troubleshooting the 5-Slot Ethernet Cradle

Problem	Cause	Solution
During communication, no data transmits, or transmitted data was incomplete.	Device removed from cradle during communications.	Replace device in cradle and retransmit.
	Incorrect cable configuration.	Ensure that the correct cable configuration.
	Device has no active connection.	An icon is visible in the status bar if a connection is currently active.
LEDs do not light when device is inserted.	Cradle is not receiving power.	Ensure the power cable is connected securely to both the cradle and to AC power.
	Device is not seated firmly in the cradle.	Remove and re-insert the device into the cradle, ensuring it is firmly seated.
Battery is not charging.	Device removed from the cradle too soon.	Replace the device in the cradle. The battery charges from fully depleted to 90% in less than 2 hours.
	Battery is faulty.	Verify that other batteries charge properly. If so, replace the faulty battery.
	Device is not inserted correctly in the cradle.	Remove the device and reinsert it correctly. Verify charging is active. Touch **Settings** > **Battery** to view battery status.
	Ambient temperature of the cradle is too warm.	Move the cradle to an area where the ambient temperature is between 0°C (+32°F) and +50°C (+122°F).

Technical Specifications

For device technical specifications, go to zebra.com/tc701-info.

AC670 Decode Ranges

The following table provides the decode distances for the AC670 scan engine.

Table 39 AC670 Decode Ranges

Barcode	Typical Near	Typical Far
5 mil PDF417	6.4 in (16.3 cm)	39.4 in (100 cm)
10 mil QR	5.0 in (12.7 cm)	46.1 in (117 cm)
5 mil Code 39 2.5:1	4.6 in (11.7 cm)	57.1 in (145 cm)
6.67 mil PDF417	5.3 in (13.5 cm)	51.8 in (132 cm)
10 mil Data Matrix	4.8 in (12.2 cm)	53.1 in (135 cm)
10 mil PDF417	3.7 in (9.4 cm)	77.9 in (198 cm)
10 mil Code 128	*	104.0 in (264 cm)
80% UPCA	2.3* in (5.8* cm)	111.0 in (282 cm)
100% UPCA	2.2* in (5.6* cm)	147.0 in (373 cm)
15 mil Code 128 4"-wide*	5.0* in (12.7* cm)	148.0 in (377 cm)
20 mil Code 39 2.2:1 3.5" height	*	215.0 in (546 cm)
20 mil Code 39, 3:1, 1.75" high	*	268.0 in (681 cm)
55 mil QR	*	303.0 in (770 cm)
40 mil Code 39, 2.2:1, 3.5" height	*	431.0 in (1095 cm)
100 mil Datamatrix	*	580.0 in (1473 cm)
55 mil Code 39, 2.2:1, 4.5" high	*	602.0 in (1529 cm)
55 mil Code 39, 3:1, 4" high	*	668.0 in (1698 cm)
55 mil Code 39 RFL 3:1, 4.5" high	*	701.0 in (1781 cm)
100 mil Code 128, RFL	*	1043.0 in (2649 cm)

Table 39 AC670 Decode Ranges (Continued)

Barcode	Typical Near	Typical Far
100 mil Code 39, RFL, 3:1, 6" height	*	1312.0 in (3333 cm)
100 mil Code 39, 3:1 8"-height	*	1380.0 in (3505 cm)
*Distances limited by the width of the barcode in the field of view, depending on the placement of the aiming dot relative to the barcode.		

SR500 Decode Ranges

The following table provides the decode distances for the SR500 scan engine.

Table 40 SR500 Decode Ranges

Bar Code Type	Near Distance (in / cm, typical)	Far Distance (in / cm, typical)
3 mil Code 39	2.4 in/6.1 cm	6.8 in / 17.3 cm
5 mil Code 128	1.9 in/4.8 cm	25.7 in / 10.1 cm
5 mil Code 39	1.7 in/4.4 cm	11.3 in / 28.6 cm
5 mil PDF417	2.8 in/7.1 cm	8.0 in / 20.3 cm
6.67 mil PDF417	2.2 in/5.6 cm	10.3 in / 26.2 cm
10 mil Data Matrix	1.8 in/4.6 cm	12.4 in / 31.5 cm
100% UPCA	1.5 in/3.8 cm	25.7 in / 65.3 cm
15 mil Code 128	2.5 in/6.4 cm	29.2 in / 74.2 cm
20.0 mil Code 39	2.0 in/5.1 cm	40.4 in / 102.6 cm
20.0 mil QR Code	2.1 in/5.3 cm	19.4 in / 49.3 cm
* Limited by the width of the barcode in the field of view. Note: Photographic quality barcode at 18° tilt pitch angle under 0.1 fcd ambient illumination.		

SR560 Decode Ranges

The following table provides the decode distances for the SR560 scan engine.

Table 41 SR560 Decode Ranges

Bar Code Type	Near Distance (in / cm, typical)	Far Distance (in / cm, typical)
3 mil Code 39	2.4 in/6.1 cm	6.8 in / 17.3 cm
5 mil Code 128	1.9 in/4.8 cm	25.7 in / 10.1 cm
5 mil Code 39	1.7 in/4.4 cm	11.3 in / 28.6 cm
5 mil PDF417	2.8 in/7.1 cm	8.0 in / 20.3 cm
6.67 mil PDF417	2.2 in/5.6 cm	10.3 in / 26.2 cm

Table 41 SR560 Decode Ranges (Continued)

Bar Code Type	Near Distance (in / cm, typical)	Far Distance (in / cm, typical)
10 mil Data Matrix	1.8 in/4.6 cm	12.4 in / 31.5 cm
100% UPCA	1.5 in/3.8 cm	25.7 in / 65.3 cm
15 mil Code 128	2.5 in/6.4 cm	29.2 in / 74.2 cm
20.0 mil Code 39	2.0 in/5.1 cm	40.4 in / 102.6 cm
20.0 mil QR Code	2.1 in/5.3 cm	19.4 in / 49.3 cm
* Limited by the width of the barcode in the field of view. Note: Photographic quality barcode at 18° tilt pitch angle under 0.1 fcd ambient illumination.		

1-Slot Cradle Technical Specifications

This section provides technical specifications for the 1-Slot Cradle.

Table 42 1-Slot Cradle Technical Specifications

Item	Description
Dimensions	Height: 9.9 cm (3.9 in.) Width: 19.6 cm (7.71 in.) Depth: 13.3 cm (5.24 in.)
Weight	816 g (28.7 oz.)
Input Voltage	5-12 VDC
Power Consumption	Up to 27 watts (1 device charging and communication)
Operating Temperature	0°C to 50°C (32°F to 122°F)
Storage Temperature	-40°C to 70°C (-40°F to 158°F)
Charging Temperature	0°C to 40°C (32°F to 104°F)
Humidity	5% to 95% non-condensing
Drop	76.2 cm (30.0 in.) drops to vinyl tiled concrete at room temperature.
Electrostatic Discharge (ESD)	+/- 15 kV air +/- 8 kV contact +/- 8 kV indirect discharge

1-Slot Ethernet Cradle Technical Specifications

This section provides technical specifications for the 1-Slot Ethernet Cradle.

Table 43 1-Slot Ethernet Cradle Technical Specifications

Item	Description
Dimensions	Height: 9.9 cm (3.9 in.) Width: 19.6 cm (7.71 in.) Depth: 13.3 cm (5.24 in.)
Weight	823 g (29.0 oz.)
Input Voltage	5-12 VDC
Power Consumption	Up to 27 watts (1 device charging and communication)
Operating Temperature	0°C to 50°C (32°F to 122°F)
Storage Temperature	-40°C to 70°C (-40°F to 158°F)
Charging Temperature	0°C to 40°C (32°F to 104°F)
Humidity	5% to 95% non-condensing
Drop	76.2 cm (30.0 in.) drops to vinyl tiled concrete at room temperature.
Electrostatic Discharge (ESD)	+/- 15 kV air +/- 8 kV contact +/- 8 kV indirect discharge

5-Slot Cradle Technical Specifications

This section provides technical specifications for the 5-Slot Cradle.

Table 44 5-Slot Cradle Technical Specifications

Item	Description
Dimensions	Height: 10.6 cm (4.17 in.) Width: 48.9 cm (19.25 in.) Depth: 13.3 cm (5.24 in.)
Weight	1,937 g (68 oz.)
Input Voltage	5-12 VDC
Power Consumption	Up to 100 watts (5 devices charging and communication at the same time)
Operating Temperature	0°C to 50°C (32°F to 122°F)
Storage Temperature	-40°C to 70°C (-40°F to 158°F)
Charging Temperature	0°C to 40°C (32°F to 104°F)

Table 44 5-Slot Cradle Technical Specifications (Continued)

Item	Description
Humidity	5% to 95% non-condensing
Drop	76.2 cm (30.0 in.) drops to vinyl tiled concrete at room temperature.
Electrostatic Discharge (ESD)	+/- 15 kV air +/- 8 kV contact +/- 8 kV indirect discharge

5-Slot Ethernet Cradle Technical Specifications

This section provides technical specifications for the 5-slot Ethernet Cradle.

Table 45 5-Slot Ethernet Cradle Technical Specifications

Item	Description
Dimensions	Height: 10.6 cm (4.17 in.) Width: 48.9 cm (19.25 in.) Depth: 13.3 cm (5.24 in.)
Weight	2,010 g (71 oz.)
Input Voltage	5-12 VDC
Power Consumption	Up to 100 watts (5 devices charging and communication at the same time)
Operating Temperature	0°C to 50°C (32°F to 122°F)
Storage Temperature	-40°C to 70°C (-40°F to 158°F)
Charging Temperature	0°C to 40°C (32°F to 104°F)
Humidity	5% to 95% non-condensing
Drop	76.2 cm (30.0 in.) drops to vinyl tiled concrete at room temperature.
Electrostatic Discharge (ESD)	+/- 15 kV air +/- 8 kV contact +/- 8 kV indirect discharge

Trigger Handle Technical Specifications

This section provides technical specifications for the Trigger Handle.

Table 46 Trigger Handle Technical Specifications

Item	Description
Dimensions	Height: 17.2 cm (6.7 in.) Width: 13.3 cm (5.2 in.) Depth: 8.8 cm (3.4 in.)
Weight	127.6 g (4.5 oz.)
Input Voltage	12 VDC
Operating Temperature	-20°C to 50°C (-4°F to 122°F)
Storage Temperature	-40°C to 70°C (-40°F to 158°F)
Humidity	5% to 95% non-condensing
Drop	Trigger/TC5X device: 6 feet drop - 4 drops on 6 sides to concrete over -20°C to 50°C temperature range. Separation of terminal and trigger handle is acceptable during drop.
	Trigger only: 6 feet drop - 4 drops on 6 sides to concrete over -20°C to 50°C temperature range.
Electrostatic Discharge (ESD)	+/- 15 kV air +/- 8 kV contact

Charge/USB Cable Technical Specifications

This section provides technical specifications for the Charge/USB Cable.

Table 47 Charge/USB Cable Technical Specifications

Item	Description
Length	164 +/- 6 cm (64.6 +/- 2.4 in.)
Input Voltage	5.0 VDC
Operating Temperature	-20°C to 50°C (-4°F to 122°F)
Storage Temperature	-40°C to 70°C (-40°F to 158°F)
Humidity	10% to 95% non-condensing
Drop	76.2 cm (30.0 in.) drops to vinyl tiled concrete at room temperature.
Electrostatic Discharge (ESD)	+/- 15 kV air +/- 8 kV contact